TULUKSAK, ALASKA

WASTEWATER SYSTEM IMPROVEMENTS PHASE I & II

- COMMUNITY HONEYBUCKET DUMPSITE IMPROVEMENTS
- WASTEWATER TREATMENT AND DISPOSAL AREA
- COMMUNITY LIFT STATION
- GRAVITY SEWER AND FORCEMAIN PIPING

Prepared for the Tuluksak Native Community

In Cooperation with the State of Alaska
Department of Environmental Conservation
Village Safe Water Program

REISSUED FOR CONSTRUCTION - JUNE 17, 2014

STATE OF ALASKA 49TH Michael R. Erdman No.6252 REGISTERED PROFESSIONAL ENGINEER

6/17/14

LOCATION MAP

CE2 ENGINEERS, INC.
PO BOX 232948 ANCHORAGE, AK 99523 PH: 907-349-1010 FAX: 907-349-1015

VILLAGE SAFE WATER ALASKA

Project Number (Consultant) _____

VSW Project Manager _____

Construction Foreman _____

Final Design (Date) _____

ADEC Approval (Date) _____

Construction Period (From) _____ (To) _____

As-Builts (Date) _____

RECORD DRAWING CERTIFICATE

THESE DRAWINGS REFLECT RECORDED INFORMATION OBTAINED DURING CONSTRUCTION.
INFORMATION PROVIDED HEREIN IS ACCURATE TO THE BEST OF MY KNOWLEDGE.

NAME _____ DATE _____

SCOPE OF THE PROJECT

THIS PLAN SET COVERS PHASE I & II OF THE TULUKSAK WASTEWATER SYSTEM IMPROVEMENTS PROJECT. WHEN FULLY IMPLEMENTED, THIS PROJECT WILL PROVIDE BURIED PIPED GRAVITY SEWER SERVING THE CORE AREA (WASHETERIA, TEEN CENTER, CLINIC, CONSTRUCTION CAMP, STORE AND SCHOOL). THE PROJECT WILL CONSTRUCT A SEWER LIFT STATION, SEWER FORCEMAIN AND WASTEWATER LAGOON WITH A HONEY BUCKET DUMP.

SHEET INDEX

GENERAL NOTES

A. GENERAL:

1. THE PROJECT SUPERINTENDENT SHALL MAINTAIN A CLEAN SET OF "AS BUILT" RECORD DRAWINGS SHOWING THE LOCATIONS AND SWING TIES TO ALL APPURTENANCES. ALL ELEVATIONS SHALL BE MARKED ASB (AS-BUILT) WITH THE CORRECT VALUE INSERTED. DRAWINGS SHALL BE KEPT CURRENT IN RED PENCIL ON A DAILY BASIS IN A NEAT, LEGIBLE FASHION. COPIES OF THE AS-BUILT DRAWINGS SHALL BE SUBMITTED TO THE TULUKSAK NATIVE COMMUNITY AND VSW UPON COMPLETION OF CONSTRUCTION.
2. THE BASIS OF BEARINGS FOR HORIZONTAL CONTROL IS SHOWN ON SHEET G2.0.
3. THE BASIS OF VERTICAL CONTROL IS SHOWN ON SHEET G2.0.
4. EXISTING UTILITIES ARE SHOWN IN APPROXIMATE LOCATIONS TO THE BEST KNOWLEDGE OF THE ENGINEER AT THE TIME OF DESIGN. RECORDS MAY NOT BE COMPLETELY ACCURATE. THE PROJECT SUPERINTENDENT SHALL VERIFY HORIZONTAL AND VERTICAL LOCATIONS OF UTILITIES WITHIN EACH CONSTRUCTION REACH PRIOR TO BEGINNING WORK.
5. THE RECOMMENDED FINISHED FLOOR ELEVATION OF STRUCTURES IS 2.0 FEET ABOVE THE CORPS OF ENGINEERS 100-YEAR FLOOD ELEVATION. FOR THIS PROJECT THE 100-YEAR FLOOD STAGE IS ELEV. 30.3 FEET AND MINIMUM FINISHED FLOOR ELEVATION IS 32.3 FEET.

B. ARCTIC PIPE:

1. CARRIER PIPE:
FORCEMAINS SHALL BE 4" AND 6" HDPE, SDR 11. GRAVITY MAINS SHALL BE 8" HDPE, SDR 17. ALL HDPE PIPING SHALL BE LISTED BY THE PPI WITH A DESIGNATION OF PE3408 AND A CELL CLASSIFICATION OF 345434C OR BETTER AS PER ASTM D3350.
2. INSULATION:
ARCTIC PIPE INSULATION SHALL BE CLOSED CELL (ASTM D2341 CELL CLASSIFICATION 550674970034) URETHANE FOAM WITH A MAXIMUM K FACTOR OF 0.155 BTU-IN/HR-SF-DEG F. THE INSULATION CORE DENSITY SHALL BE BETWEEN 3.0 AND 4.0 LBS/CF. VOIDS GREATER THAN 0.05 CUBIC INCHES BEYOND 24 INCHES OF EITHER END OF THE PIPE SECTION WILL BE CAUSE FOR REJECTION OF THE PIPE. SEE TECHNICAL SPECIFICATION FOR FURTHER REQUIREMENTS.
3. OUTER JACKET MATERIAL:
THE OUTER JACKET MATERIAL FOR ALL ARCTIC PIPE AND FITTINGS SHALL BE 16 GAUGE HELICAL CORRUGATED ALUMINUM PIPE WITH SEAMS THAT WILL WITHSTAND A HYDROSTATIC PRESSURE OF 5 FEET OF WATER WITH NO LEAKAGE.
4. HYDRONIC HEAT TRACE:
HYDRONIC HEAT TRACE (WHERE SPECIFIED) SHALL BE A MINIMUM OF 2" DIA. HDPE, SDR 11 AND LISTED BY THE PPI WITH A DESIGNATION OF PE3408 AND A CELL CLASSIFICATION OF 345434C OR BETTER AS PER ASTM D3350.

C. CLEARING AND GRUBBING:

1. THE CONSTRUCTION CREW SHALL REMOVE ALL TREES, BRUSH, VEGETATIVE MAT, AND OTHER OBJECTIONABLE MATERIAL WITHIN THE ROAD FOOTPRINT. WHERE DIKE FILL IS TO BE PLACED OVER SOFT, SATURATED TUNDRA, THE GROUND SURFACE MAY BE PREPARED BY CUTTING BRUSH AND TREES WITHIN THE DIKE FOOTPRINT AND GRUBBING AN 8-FOOT WIDE KEYWAY ALONG THE CENTER OF THE DIKE.
2. ALL GRUBBED MATERIAL SHALL BE DISPOSED OF IN THE DESIGNATED SPOILS DEPOSITION AREA OR THE BORROW AREA EAST OF THE LAGOON AND WITHIN THE PROJECT PROPERTY. A PORTION OF THE GRUBBED ORGANIC TOPSOIL SHALL BE STOCKPILED AND LATER USED TO COVER AND REVEGETATE THE DIKE SIDESLOPES, BORROW AREA, AND OTHER AREAS DISTURBED BY CONSTRUCTION.

D. EARTHWORK:

1. SIDE WALLS OF EXCAVATIONS SHALL BE SLOPED OR SUFFICIENTLY BRACED IN CONFORMANCE WITH SECTION 05.160 OF THE STATE OF ALASKA DEPARTMENT OF LABOR STANDARDS AND THE LATEST FEDERAL OSHA EXCAVATION AND TRENCHING STANDARDS. IF IT IS NECESSARY TO LEAVE AN OPEN EXCAVATION UNATTENDED, THE OPEN EXCAVATION SHALL BE ADEQUATELY SIGNED AND BARRICADED TO WARN RESIDENTS OF THE HAZARD.
2. COMPACTION OF STRUCTURAL FOUNDATIONS, PIPE ZONE MATERIALS, EMBANKMENTS AND ROADWAYS SHALL BE ACCOMPLISHED USING A MINIMUM OF THREE (3) PASSES WITH A 15,000 POUND VIBRATORY DRUM COMPACTOR. EMBANKMENT FILL SHALL BE COMPACTED IN MAXIMUM 8"-INCH LIFTS PRIOR TO SUBSEQUENT PLACEMENT OF FILL .SUPERINTENDENT SHALL COORDINATE AN INITIAL EFFORT INSPECTION WITH THE ENGINEER AND VSW TO VERIFY THE ACTUAL COMPACTIVE EFFORT REQUIRED. IF LIGHTER EQUIPMENT IS SUBSTITUTED THE LIFT DEPTH AND NUMBER OF PASSES SHALL BE ADJUSTED TO OBTAIN THE SAME COMPACTIVE EFFORT .
3.
4. WHERE EXCAVATIONS ENCOUNTER GROUNDWATER, DEWATERING SHALL BE IMPLEMENTED AND TEMPORARY SHORING MAY BE REQUIRED TO STABILIZE THE WALLS WHILE EXCESS WATER IS ALLOWED TO DRAIN OR PUMPED OUT OF THE EXCAVATION.

E. PIPELINE TESTING:

1. GENERAL:
ALL TESTING SHALL BE IN CONFORMANCE WITH THE FOLLOWING REQUIREMENTS:
ALL TESTS SHALL BE WITNESSED BY A REPRESENTATIVE DESIGNATED BY THE COMMUNITY. UPON SUCCESSFUL COMPLETION OF A TEST THE RESULTS OF THE TEST SHALL BE DOCUMENTED ON A TEST FORM AND ACKNOWLEDGED BY SIGNATURE OF THE COMMUNITY'S REPRESENTATIVE WITNESSING THE TEST AND BY THE PROJECT SUPERINTENDENT. THE SUPERINTENDENT'S RED LINED AS-BUILT DRAWINGS SHALL ALSO NOTE THE TIME AND DATE OF THE TEST, AS WELL AS THE NAME OF THE COMMUNITY'S WITNESS, FOR EACH PIPE SEGMENT TESTED.
2. FORCEMAIN TESTING:
PERFORM HYDROSTATIC TESTING OF ALL FORCEMAIN PIPING. FILL THE LINES WITH POTABLE WATER AND REMOVE AIR POCKETS PRIOR TO STARTING THE TEST. PRESSURIZE TO 100 PSI AND LEAVE FOR A MINIMUM OF 1 HOUR. AFTER THIS INITIAL PERIOD, ADD WATER TO BRING THE PRESSURE UP TO 100 PSI AND BEGIN A ONE HOUR TEST. THERE SHALL BE NO LOSS IN PRESSURE DURING THE 1 HOUR TEST FOR THE PIPING TO BE ACCEPTED.
3. GRAVITY SEWER MAIN TESTING:
THE CONSTRUCTION CREW SHALL CLEAN AND FLUSH ALL SANITARY SEWER MAINS PRIOR TO VISUAL INSPECTION (LAMPING) AND PRESSURE TESTING.
EACH REACH OF SEWER MAIN SHALL BE LAMPED, MANHOLE TO MANHOLE, WITH A HIGH INTENSITY LIGHT AND LARGE MIRROR. SEGMENTS NOT LAMPING TO 7/8 OF A FULL MOON SHALL BE REALIGNED AND/OR REGRADED AS NECESSARY TO MEET THE 7/8 MOON REQUIREMENT.
ALL SEGMENTS OF COMPLETED SEWER MAIN AND OUTFALL SHALL BE PRESSURE TESTED FROM MANHOLE TO MANHOLE OR TERMINUS TO TERMINUS WITH AIR AT THE END OF CONSTRUCTION (PRIOR TO CONNECTING SEWER SERVICE LINES). AIR SHALL BE SLOWLY SUPPLIED TO THE PLUGGED PIPE INSTALLATION UNTIL THE INTERNAL AIR PRESSURE REACHES 4.0 POUNDS PER SQUARE INCH (PSI) GREATER THAN THE AVERAGE BACK PRESSURE OF ANY GROUNDWATER THAT MAY SUBMERGE THE PIPE. AT LEAST TWO (2) MINUTES SHALL BE ALLOWED FOR TEMPERATURE STABILIZATION BEFORE PROCEEDING WITH THE TEST. AT THE END OF THE STABILIZATION PERIOD THE AIR PRESSURE SHALL BE ADJUSTED TO THE TEST PRESSURE AND THE 10 MINUTE TEST PERIOD SHALL BEGIN.
THE MAXIMUM ALLOWABLE PRESSURE DROP FOR ANY SEWER MAIN SEGMENT DURING THE 10 MINUTE TEST PERIOD SHALL BE 2.7 PSI.
4. SEWER MANHOLE TESTING :

F. REVEGETATION SPECIFICATION:

1. THE ENTIRE AREA DISTURBED BY CONSTRUCTION SHALL BE REVEGETATED AS QUICKLY AS GOOD CONSTRUCTION PRACTICE ALLOWS. AREAS TO BE REVEGETATED SHALL FIRST BE COVERED WITH A MINIMUM 6-INCH LAYER OF FRIABLE, LOOSELY PLACED TOPSOIL, FREE OF DEBRIS. THE FOLLOWING SEED MIXTURE AND FERTILIZER APPLICATION RATES SHALL BE APPLIED:

SEED	NAME/TYPE	RATE	METHOD
Red Fescue	Arctic Red	14 lbs/acre	Broadcast
Bering Hairgrass	Norcoast	16 lbs/acre	Broadcast
Rye Grass	Annual	2 lbs/acre	Broadcast
FERTILIZER	20-20-20	180 lbs/acre	Broadcast

2. EROSION CONTROL FABRIC:
USE BIODEGRADABLE JUTE MESH WITH A LIFE OF 1-2 YEARS. INSTALL ON SLOPES AFTER SEEDING AND ANCHOR SECURELY WITH GROUND STAPLES.

G. HONEY BUCKET DUMPSITE CLOSURE

1. THE DUMPSITE CLOSURE WILL OCCUR ONCE THE NEW LAGOON IS OPERATIONAL.

PROJECT DESCRIPTION

THIS PROJECT CONSTRUCTS A TWO-CELL FACULTATIVE PERCOLATION LAGOON, A LIFT STATION, AND A SEWAGE FORCE MAIN BETWEEN THE LAGOON AND LIFT STATION.

THE LAGOON SYSTEM WILL PROVIDE WASTEWATER TREATMENT OF DOMESTIC WASTEWATER. TREATMENT INVOLVES A COMBINATION OF PROCESSES THAT REMOVE SOLIDS, BIODEGRADABLE ORGANICS, AND PATHOGENS FROM THE WATER PRIOR TO ITS RELEASE INTO THE PERCOLATION CELL.

THE FIRST CELL WILL RECEIVE RAW WASTEWATER VIA A FORCE MAIN FROM A LIFT STATION LOCATED WITHIN THE VILLAGE. CELL 1 IS DESIGNED TO PROVIDE A QUIESCENT ZONE FOR DIGESTION OF ORGANIC MATTER AND BIODEGRADABLE CONTAMINANTS BY BOTH AEROBIC AND ANAEROBIC MICROBES AND STORAGE FOR NON-DIGESTABLE SOLIDS. A MAX. LOADING RATE OF 38#/ACRE-DAY. CELL 1 IS HYDRAULICALLY CONNECTED TO CELL 2 WITH AN INTERCONNECTING DUAL PIPE CONTROL STRUCTURE DESIGNED TO MAINTAIN A LIQUID DEPTH OF NO MORE THAN 7.0 FEET IN CELL 1. CELL 2 IS DESIGNED TO PERCOLATE WITH A MAXIMUM HYDRAULIC APPLICATION RATE OF 0.9 GAL/SF-DAY.

WORK SUMMARY

CONSTRUCT A DUAL-CELL, LINED WASTEWATER TREATMENT LAGOON AND ASSOCIATED HYDRAULIC CONTROL FEATURES.

INSTALL A FORCEMAIN AND GRAVITY SEWER MAIN FROM THE CORE PART OF THE COMMUNITY TO THE PROPOSED FACULTATIVE LAGOON SITE.

INSTALL A CENTRAL COMMUNITY LIFT STATION AND HONEYBUCKET DUMPING FACILITY.

INSTALL A HYDRONIC HEAT TRACE AND WASTE HEAT RECOVER SYSTEM TO PROVIDE FREEZE PROTECTION OF THE LAGOON FORCEMAIN AND HONEYBUCKET DUMPING STATION.

SYSTEM STARTUP

LIFT STATION STARTUP

AFTER INSTALLATION OF ALL NEW LIFT STATION EQUIPMENT, THE PROJECT SUPERINTENDENT SHALL START AND FIELD TEST EACH PUMP UNIT TO DEMONSTRATE ITS ABILITY TO PUMP WITHOUT EXCESSIVE VIBRATION, MOTOR OVERLOADING OR OVERHEATING. EACH PUMP SHALL BE OPERATED FOR A SUFFICIENT PERIOD OF TIME TO PERMIT THOROUGH OBSERVATION OF ALL PUMP COMPONENTS. THE PROJECT SUPERINTENDENT SHALL VERIFY THE PROPER SEQUENCING AND OPERATION OF ALL CONTROLS.

AFTER THE LIFT STATION INSTALLATION IS COMPLETE BUT PRIOR TO DRAWING WASTEWATER INTO THE WET WELL, THE SUPERINTENDENT SHALL DETERMINE THE DISCHARGE RATE OF EACH OF THE SUBMERSIBLE WASTEWATER PUMPS, INDEPENDENTLY AND IN TANDEM. THESE MEASUREMENTS SHALL BE RECORDED ON THE RECORD DRAWINGS FOR FUTURE REFERENCE.

THE DISCHARGE PUMPING RATE SHALL BE DETERMINED BY MEASURING DRAWDOWN OF POTABLE WATER PLACED IN THE WET WELL. ALL LIFT STATION TESTING SHALL BE PERFORMED WITH POTABLE WATER.

LAGOON STARTUP

SAMPLING WELLS SHOULD BE USED TO DETERMINE THE INITIAL NITRATE LEVELS PRIOR TO USE OF THE LAGOON SYSTEM.

STORM WATER MANAGEMENT PLAN

CONSTRUCTION SHALL BE PLANNED AND EXECUTED TO EXPEDITIOUSLY COMPLETE THE PROJECT WHILE MAINTAINING THE CONSTRUCTION SITE IN A MANNER THAT REDUCES THE POTENTIAL FOR CONTAMINATED STORM RUNOFF. SPECIFIC STEPS ARE TO INCLUDE THE FOLLOWING:

- PRIOR TO CONSTRUCTION DEVELOP A STORMWATER POLLUTION PREVENTION PLAN (SWPPP), WHICH UTILIZES THE BEST MANAGEMENT PRACTICES (BMPS) AND IS IN COMPLIANCE WITH THE NATIONAL POLLUTANT DISCHARGE ELIMINATION SYSTEM (NPDES) AND THE ALASKA CONSTRUCTION GENERAL PERMIT NO. AKR10000. THIS PLAN MUST BE APPROVED BY THE STATE OF ALASKA ADEC.
- FILE A NOTICE OF INTENT (NOI) WITH THE EPA A MINIMUM OF 7-DAYS PRIOR TO THE START OF CONSTRUCTION.
- CONSTRUCTOR SHALL BE VIGILANT WITH IMPLEMENTATION OF THE PLAN.

LEGEND

EXISTING (PLAN VIEW / PROFILE VIEW)	PROPOSED (PLAN VIEW / PROFILE VIEW)	DESCRIPTION
		GROUND SURFACE
		DRAINAGE/WATER FEATURE
FM	FM	SEWER FORCE MAIN, LIFT STATION , REDUCER, AND DOUBLE WYE CLEANOUT
SS	SS	SEWER SERVICE LINE
		CULVERT
E		BURIED ELECTRICAL LINE
FO		BURIED FUEL OIL LINE
T		BURIED TELEPHONE LINE
E		OVERHEAD ELECTRIC
		EASEMENT
		UTILITY POLE
		FENCE
		ROADS AND TRAVELED WAYS
24	24	CONTOUR LINE
		R.O.W. (RIGHT- OF- WAY)
		SHORELINE
		TREES AND/OR BRUSH
MAJOR / MINOR		STRUCTURE
		GROUND PROFILE
		DIRECTION OF DRAINAGE
		PROPERTY LINE
		SECTION LINE
		BLM BRASS CAPPED MONUMENT
	ELEV 32.0'	BENCH MARK
24.5		SPOT ELEVATION
	#1012	REBAR - ABILITY SURVEY POINT NO.
		YELLOW PLASTIC CAP (REBAR)
TRACT 3		TRACT NUMBER
LOT 8		LOT NUMBER
	△	HEAT TRACE POWER SUPPLY

SECTION AND DETAIL DESIGNATIONS

SECTION LETTER — B — SECTION — C3.5 — NTS — SHEET ON WHICH SECTION IS SHOWN

DETAIL NUMBER — 1 — DETAIL — C3.5 — NTS — SHEET ON WHICH DETAIL IS SHOWN

MATERIAL QUANTITIES

ITEM	ESTIMATED QUANTITY
LAGOON OVERBURDEN	7,500 CU. YDS.
LAGOON CUT/FILL VOLUME	40,000 CU. YDS.
6" ARCTIC FORCEMAIN	3,740 L.F.
4" ARCTIC FORCEMAIN	511 L.F.
8" ARCTIC SEWER MAIN	1,351 L.F.
FORCEMAIN CLEAN OUT ASSEMBLY	8 EACH

ABBREVIATIONS

A.P.	ANGLE POINT (HORIZONTAL)
CMP	CORRUGATED METAL PIPE
C.O.E.	CORPS OF ENGINEERS
CULV.	CULVERT
FF	FINISHED FLOOR ELEVATION
G.B.	GRADE BREAK (VERTICAL)
G.V.	GATE VALVE
HDPE	HIGH DENSITY POLYETHYLENE PIPE
INV.	INVERT
IPS	IRON PIPE SIZE (INDUSTRY STANDARD OUTSIDE PIPE DIAMETER)
LF	LINEAR FEET
MFR	MANUFACTURER
MH	MANHOLE
SDR	SIDE DIMENSION RATIO
SHT.	SHEET
SS	STAINLESS STEEL
STA.	STATION
TOJ	TOP OF PIPE JACKET
V.B.	VALVE BOX
WS	WATER SURFACE

RECORD DRAWING CERTIFICATE
THESE DRAWINGS REFLECT RECORDED INFORMATION OBTAINED DURING CONSTRUCTION. INFORMATION PROVIDED HEREIN IS ACCURATE TO THE BEST OF MY KNOWLEDGE.
NAME ____ DATE ____

SCALE: AS SHOWN
BAR IS ONE INCH ON ORIGINAL DRAWING — IF NOT ONE INCH ON THIS SHEET, ADJUST SCALES ACCORDINGLY

5/7/14

2010-11 WASTEWATER SYSTEM IMPROVEMENTS
GENERAL NOTES, DESIGN CRITERIA AND LEGEND
TULUKSAK, ALASKA

CE2 ENGINEERS, INC.
PO BOX 223948 ANCHORAGE, AK 99523 PH: 907-349-1010 FAX: 907-349-1015

REVISION	BY	DATE

Project No. ____
Date APRIL 2014
Designed LAP
Drawn DDR
Approved LAP

Sheet No. G1.1

RECORD DRAWING CERTIFICATE

THESE DRAWINGS REFLECT RECORDED INFORMATION OBTAINED DURING CONSTRUCTION. INFORMATION PROVIDED HEREIN IS ACCURATE TO THE BEST OF MY KNOWLEDGE.

NAME _____ DATE _____

SCALE: AS SHOWN

BAR IS ONE INCH ON ORIGINAL DRAWING

IF NOT ONE INCH ON THIS SHEET, ADJUST SCALES ACCORDINGLY

WELLNESS SAFE WATER ALASKA

STATE OF ALASKA 49TH Michael R. Eastman No.6202 REGISTERED PROFESSIONAL ENGINEER

5/7/14

2010-11 WASTEWATER SYSTEM IMPROVEMENTS

2010 AND 2011 IMPROVEMENTS SHEET INDEX

TULUKSAK, ALASKA

CE2 ENGINEERS, INC.

PO BOX 220946 ANCHORAGE, AK 99520 PH: 907-349-1010 FAX: 907-349-1015

REVISION	BY	DATE

Project No. _____

Date APRIL 2014

Designed LAP

Drawn CM/AW

Approved LAP

Sheet No. G1.2

G:\ACAD\TULUKSAK\TLT0901 2008 Waste water disposal area\IFC Rev Apr 2014\G1.2 - G1.3 SHEET INDEX.dwg, 5/6/2014 6:33:57 PM, cmerz, \\Ce2main\LANIER MP C2050/LD520C PCL 6

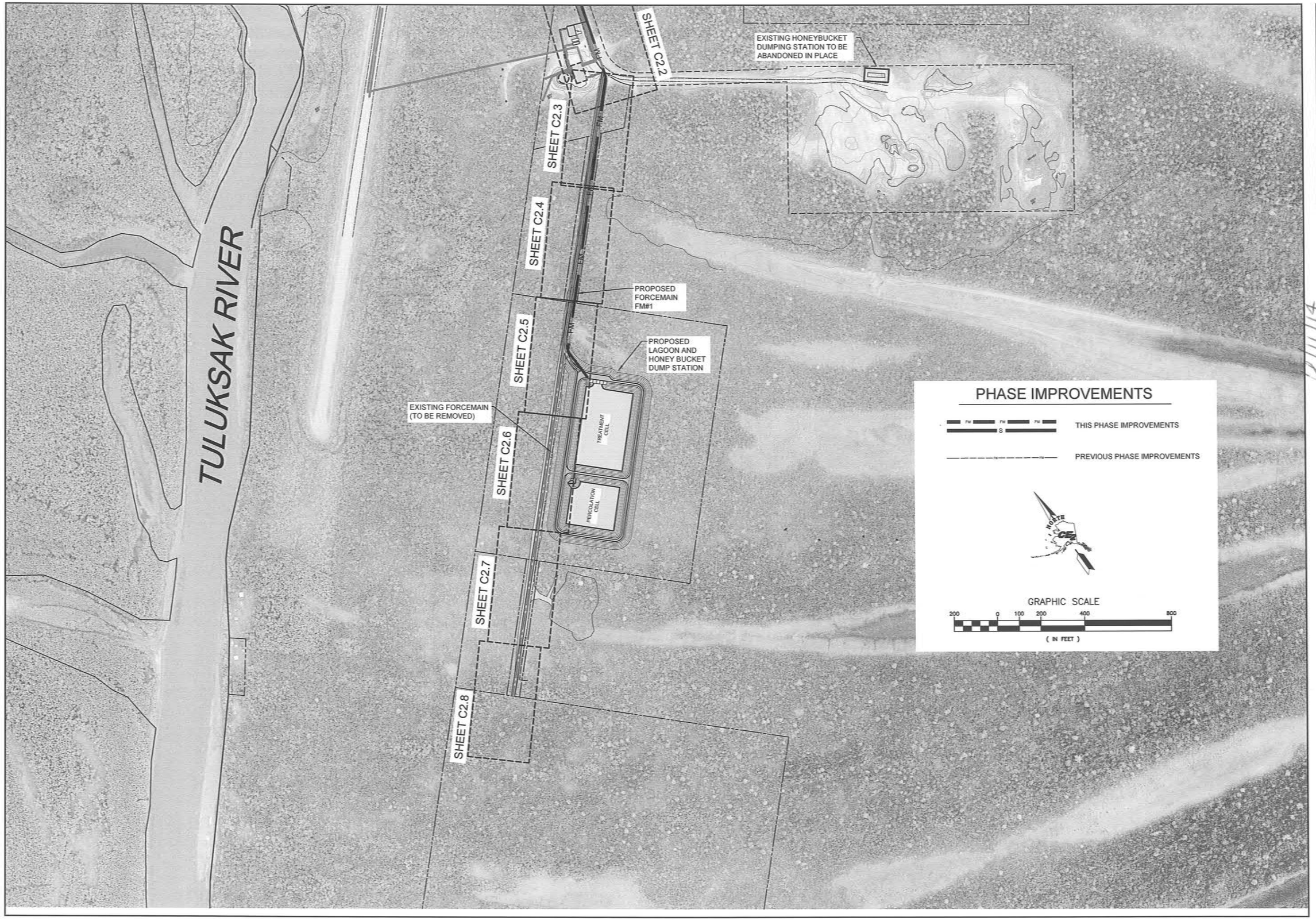

RECORD DRAWING CERTIFICATE

THESE DRAWINGS REFLECT RECORDED INFORMATION OBTAINED DURING CONSTRUCTION. INFORMATION PROVIDED HEREIN IS ACCURATE TO THE BEST OF MY KNOWLEDGE.

NAME _____ DATE _____

SCALE: AS SHOWN

BAR IS ONE INCH ON ORIGINAL DRAWING

0 1"

IF NOT ONE INCH ON THIS SHEET, ADJUST SCALES ACCORDINGLY

VILLAGE SAFE WATER ALASKA

STATE OF ALASKA 49TH Michael R. Erdman No.5252 REGISTERED PROFESSIONAL ENGINEER

2010-11 WASTEWATER SYSTEM IMPROVEMENTS

2010 AND 2011 IMPROVEMENTS SHEET INDEX

TULUKSAK, ALASKA

CE2 ENGINEERS, INC.

PO BOX 223948 ANCHORAGE, AK 99522 PH: 907-349-1010 FAX: 907-349-1015

REVISION	BY	DATE
LAGOON RELOCATION	CM	4/14
PERC. CELL RESIZED	CM	6/14

Project No. _____

Date APRIL 2014

Designed MRE

Drawn CM/LAW

Approved MRE

Sheet No. G1.3

G:\ACAD\TULUKSAK\TLT0901 2008 Waste water disposal area\IFC Rev June 2014\G1.2 - G1.3 SHEET INDEX.dwg, 6/12/2014 12:51:23 PM, cmerz, \\Ce2main\LANIER MP C2050/LD520C PCL 6

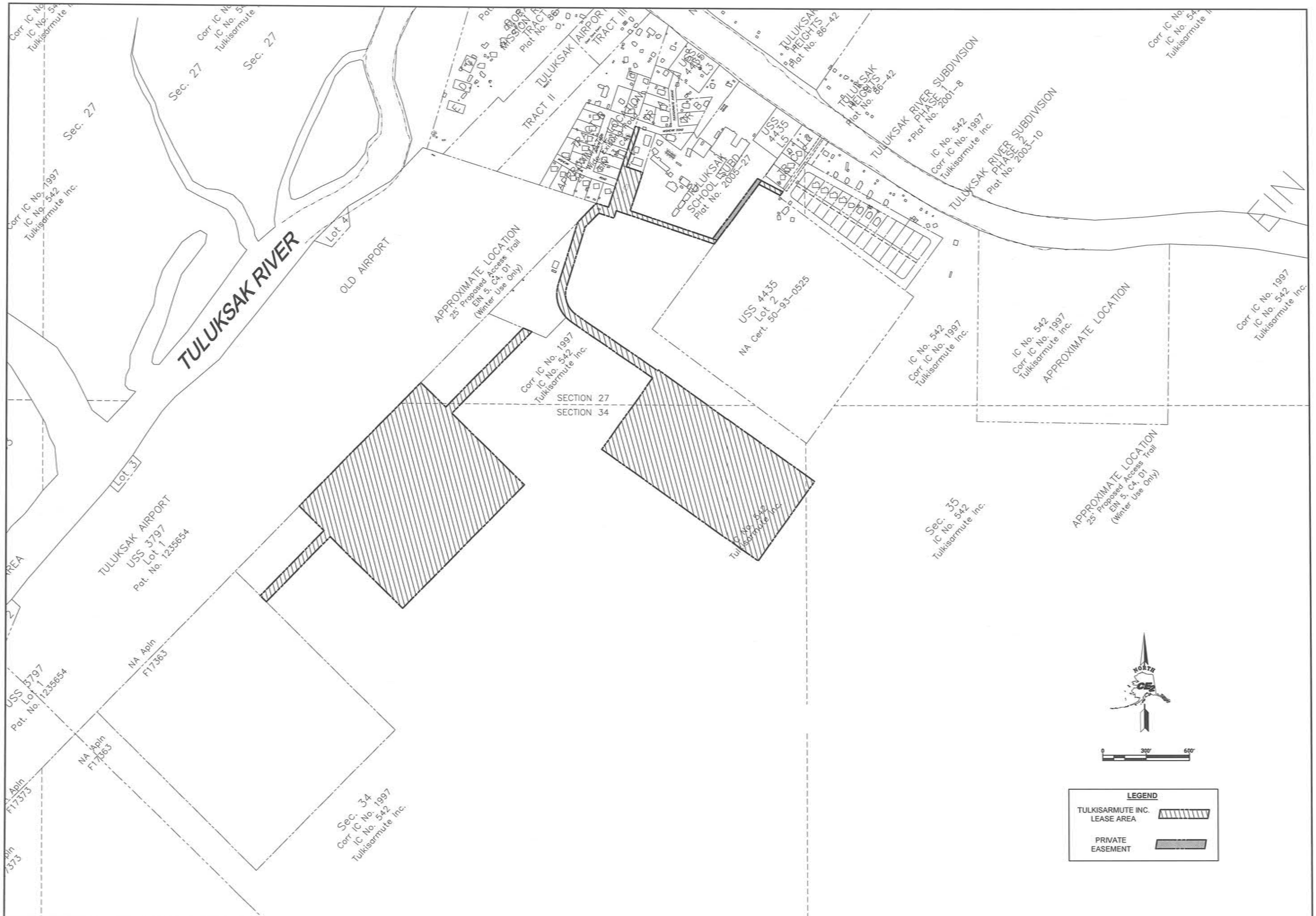

RECORD DRAWING CERTIFICATE

THESE DRAWINGS REFLECT RECORDED INFORMATION OBTAINED DURING CONSTRUCTION. INFORMATION PROVIDED HEREIN IS ACCURATE TO THE BEST OF MY KNOWLEDGE.

NAME _____ DATE _____

SCALE: AS SHOWN

THIS IS ONE INCH ON ORIGINAL DRAWING 1"

IF NOT ONE INCH ON THIS SHEET, ADJUST SCALES ACCORDINGLY

VILLAGE SAFE WATER ALASKA

2010-11 WASTEWATER SYSTEM IMPROVEMENTS

SITE CONTROL

TULUKSAK, ALASKA

CE2 ENGINEERS, INC.

PO BOX 223946 ANCHORAGE, AK 99523 PH: 907-349-1010 FAX: 907-349-1015

REVISION	BY	DATE

Project No. _____

Date APRIL 2014

Designed MRE

Drawn CM/LAW

Approved MRE

Sheet No.

G1.4

PROJECT CONTROL (GROUND) COORDINATE TABLE

Number	Northing	Easting	Elevation	Raw Desc
3000	2594495.041	1824290.109	23.63	BASE BLM BRASS CAP COR. 2, USS 875, (1960)
3001	2595445.568	1824701.089	27.26	BLM BRASS CAP LOT 3, COR. 2 USS 4435 (1991)
3002	2594347.493	1823027.080	25.04	2" ALUMINUM CAP -14975-TSM LT-L26714 (1997)
3003	2590693.676	1818957.680	27.93	BLM BRASS CAP LOT 1, COR. 4 USS 3797 (1960 & 1991)
3006	2589887.670	1819682.122	26.52	BLM BRASS CAP LOT 1, COR. 3 USS 3797 (1960 & 1991)
3013	2594343.462	1826409.100	28.20	RED PLASTIC CAP (MCLINTOCK)
3015	2594298.755	1826560.781	27.97	JET SPIKE
3016	2593887.953	1826408.475	23.55	BLM BRASS CAP COR 3, LOT 2 USS 4435 (1991)
3017	2594573.011	1825472.629	25.29	BLM BRASS CAP COR 2, LOT 2 USS 4435 (1991) BURIED 0.7'
3018	2594649.098	1825500.544	28.59	POWER POLE SPIKE TBM
3019	2594846.307	1825673.705	27.78	BLM BRASS CAP COR 1, LOT 2 USS 4435 (1991)
3020	2594836.263	1825461.451		BLM BRASS CAP COR 3, LOT 5, COR 6, LOT 1 USS 4435 (1991)
3021	2594714.793	1825377.604	26.49	5/8" REBAR
3022	2594785.016	1825159.676	24.62	BLM BRASS CAP COR 4, LOT 1, COR 4, LOT 4 USS 4435 (1991)
3025	2595271.081	1824543.942	24.86	5/8" REBAR
3028	2596151.080	1823704.447	22.24	RED PLASTIC CAP (DOWL). 5 ABOVE GROUND
3030	2594829.351	1823518.867	24.65	RED PLASTIC CAP (DOWL) BURIED 1'
3031	2594817.777	1823506.447	24.03	5/8" REBAR (BENT SHOT BASE) -CL-2+125
3033	2594521.291	1824007.672	24.42	BLM BRASS CAP COR 2, LOT 1 USS 3797 (1960)
3051	2595171.981	1824112.749	24.23	1.5" ALUMINUM CAP (IN ROAD)
3052	2595455.259	1824925.012	30.85	ARMORY-TBM-SPK AT CORP OF ENG. HIGH WATER MARK (SIGN)
3053	2595541.654	1824656.014	29.63	POWER POLE SPIKE TBM
3054	2595254.918	1824730.236	26.21	SET SPIKE IN ROAD

LEGEND

3015 TYPICAL CONTROL POINT IDENTIFIER

3015 TYPICAL CONTROL POINT IDENTIFIER WITH CONVENTIONAL DIFFERENTIAL ELEVATION

SURVEY NOTES

THIS SURVEY WAS PERFORMED WITH TRIMBLE MODEL 4700 RECEIVERS AND TRIMBLE GEOMATICS OFFICE VERSION 1.5 PROCESSING SOFTWARE. THE HORIZONTAL POSITIONS WERE DETERMINED WITH REAL TIME KINETIC METHODS BASED UPON POINT NUMBER 3000, THE BASE STATION POINT. SEE LOCAL PROJECT COORDINATE TABLE FOR POINT 3000 LOCAL PROJECT COORDINATES. POINT 3000 ALSO HAD "NAD 83 AK STATE PLANE ZONE 7 COORDINATES OF N=2594539.293 USFT., E=1824246.230 USFT., OR N=790817.158 M., E=556031.363 M., DETERMINED BY POST PROCESSING 3 STATIC SESSIONS WITH 5 OTHER CORS STATIONS.

THIS SURVEY'S COORDINATES ARE US SURVEY FEET BASED ON ALASKA DOT&PF PROJECT AKSAS 51795, TULUKSAK AIRPORT, 1997 SURVEY CONTROL. SUBMITTED BY STANLEY E. PONKSNESS, LS#6714. THIS SURVEY WAS CALIBRATED OR LOCALIZED TO SAID SURVEY BY A LEAST SQUARES BEST FIT USING SIX OF THE FORMER SURVEY CONTROL POINTS SPREAD AROUND THIS PROJECT. ALL SIX POINTS OF THIS SURVEY FIT WITHIN 0.1 USFT OF THE FORMER SURVEY PUBLISHED VALUES. THIS SURVEY THEREFORE MAINTAINS THE FORMER SURVEY HORIZONTAL GROUND DISTANCES AND LOCAL PLANE BEARINGS AS ORIENTED TO THE MEAN NAD 83 GEODETIC BEARING OF N 24°00'43"E BETWEEN MONUMENTS SET TO DEFINE THE CENTERLINE OF A PLANNED FUTURE RUNWAY CENTERLINE. SAID BEARINGS WERE REPORTED TO BE DETERMINED FROM GPS SURVEY METHODS ORIGINATING AT NGS B ORDER GPS STATION "CABIN" LOCATED NEAR DETHEL.

VERTICAL DATUM IS NAVD88 BASED UPON THIS SURVEY'S AFOREMENTIONED POST PROCESSING. THE ELIPSOIDAL HEIGHT OF POINT NO. 3000 WAS DETERMINED TO BE 87.0NO USFT, AND THE ORTHOMETRIC HEIGHT (ABOVE GEOID OR APPROXIMATE MEAN SEA LEVEL) WAS HELD AS 23.634 USFT.
CONVENTIONAL DIFFERENTIAL LEVEL LOOPS WERE USED TO CONTROL THE VERTICAL POSITIONING, USING THE ELEVATION OF 23.634 USFT OF POINT NO. 3000 AS THE BASIS OF ELEVATION.

US ARMY CORP. OF ENGINEERS FLOOD WATER GAUGE ELEVATION 0.0 IS ELEVATION 28.33 (THIS SURVEY) AS DETERMINED AT THE GAUGE SIGN ON THE CLASSROOM BUILDING IN FRONT OF THE HIGH SCHOOL. THE FLOOD WATER GAUGE SIGN LISTS THE HIGH WATER MARK AT 3.9 FEET AND THE RECOMMENDED BUILDING ELEVATION AT 5.9 FEET.

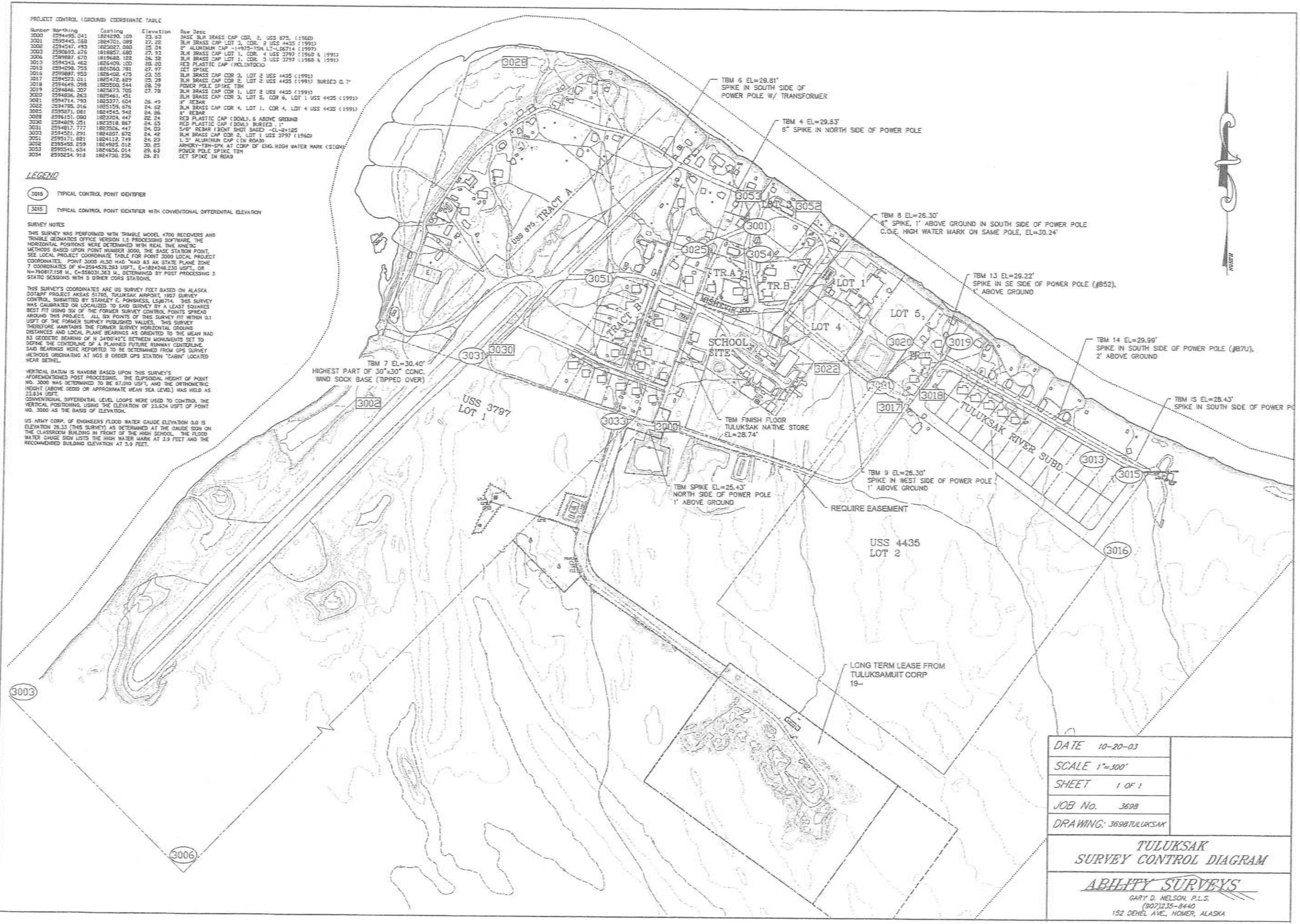

DATE	10-20-03
SCALE	1"=300'
SHEET	1 OF 1
JOB No.	3698
DRAWING:	3698TULUKSAK

TULUKSAK
SURVEY CONTROL DIAGRAM

ABILITY SURVEYS
GARY D. NELSON, P.L.S.
(907)235-8440
152 DEHEL AVE., HOMER, ALASKA

RECORD DRAWING CERTIFICATE
THESE DRAWINGS REFLECT RECORDED INFORMATION OBTAINED DURING CONSTRUCTION. INFORMATION PROVIDED HEREIN IS ACCURATE TO THE BEST OF MY KNOWLEDGE.
NAME _____ DATE _____

SCALE: AS SHOWN

BAR IS ONE INCH ON ORIGINAL DRAWING
0 1"
IF NOT THE INCH ON THIS SHEET MODIFY SCALES ACCORDINGLY

VILLAGE SAFE WATER ALASKA

2010-11 WASTEWATER SYSTEM IMPROVEMENTS

HORIZONTAL AND VERTICAL CONTROL

TULUKSAK, ALASKA

CE2 ENGINEERS, INC.
PO BOX 231944 ANCHORAGE, AK 99523 PH: 907-349-1018 FAX: 907-349-1018

REVISION	BY	DATE

Project No. _____
Date JUNE 2009
Designed LAP
Drawn ABILITY
Approved LAP

Sheet No.
G2.0

G:\ACAD\TULUKSAK\TL10901 2008 Waste water disposal area\G2.0 SURVEY CONTROL.dwg, 1/11/2011 12:57:36 PM, Plash, LANIER MP C2050_LD520C PCL 08LK WHIT.pc3

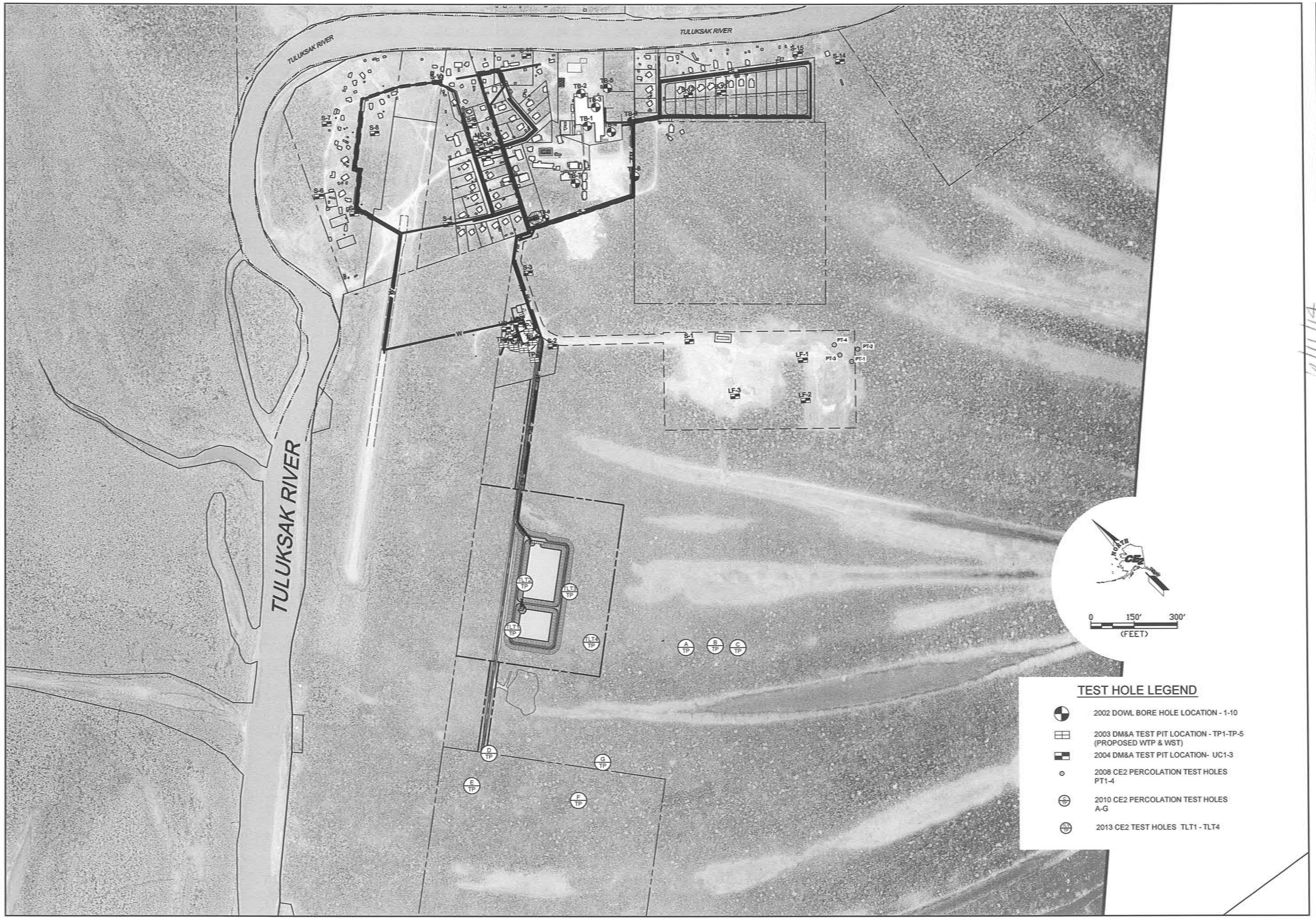

RECORD DRAWING CERTIFICATE

THESE DRAWINGS REFLECT RECORDED INFORMATION OBTAINED DURING CONSTRUCTION. INFORMATION PROVIDED HEREIN IS ACCURATE TO THE BEST OF MY KNOWLEDGE.

NAME _____ DATE _____

SCALE: AS SHOWN

BAR IS ONE INCH ON ORIGINAL DRAWING

0 1"

IF NOT ONE INCH ON THIS SHEET, ADJUST SCALES ACCORDINGLY

VILLAGE SAFE WATER ALASKA

STATE OF ALASKA 49TH Michael R. Eshman No.9252 REGISTERED PROFESSIONAL ENGINEER

2/11/14

2010-11 WASTEWATER SYSTEM IMPROVEMENTS

TEST HOLE SITE LOCATION MAP

TULUKSAK, ALASKA

CE2 ENGINEERS, INC.

PO BOX 232048 ANCHORAGE, AK 99523 PH: 907-349-1019 FAX: 907-349-1015

REVISION	BY	DATE
LAGOON RELOCATION	CM	4/14
PERC. CELL RESIZED	CM	6/14

Project No. ____

Date APRIL 2014

Designed MRE

Drawn CM

Approved MRE

Sheet No.

G3.0

G:\ACAD\TULUKSAK\TLT0901 2008 Waste water disposal area\IFC Rev June 2014\G3.0 TO G3.5.dwg, 6/12/2014 1:04:42 PM, cmerz, \\Ce2main\LANIER MP C2050/LD520C PCL 6

DUANE MILLER & ASSOCIATES

Project: Water Treatment Plant
DM&A Job No.: 4149.026
Logged By: JJB

Moisture Content *, (w)
PL & LL (–), Salinity (s)
and Sampling Blowsft (c)

Other Tests | Blow Counts | Sampler Type | Depth (Feet) | Sampling Interval | Graphic Log | Frozen

Log of HOLE: TP-1
Date Drilled: 10/28/03
Contractor: CE2
Equipment: Hitachi 200LC
GPS Coord.: N61°05'48.3" W160°57'40.6"
Elevation: --

Description

ORGANIC MAT (Pt) Dark brown, moist, w/ Organic Silt (OL) and some sand

ORGANIC SILT (OL) Gray to brown, mottled, w/ some organic debris and sand

Frozen lense (Nbn) at 3.5' to 4'

SAND (SP-SM) Brown, moist, fine to medium grained

SILTY SAND (SM) (Vx) Gray, medium grained sand, w/ occasional thin lenses of Silt (ML), 10% visible ice

Bottom of pit at 9.5'

Duane Miller & Associates
Job No.: 4149.026
Date: December 2003

LOG of TEST PIT TP-1
Water & Sewer
Tuluksak, Alaska

Plate 2

DUANE MILLER & ASSOCIATES

Project: Water Treatment Plant
DM&A Job No.: 4149.026
Logged By: JJB

Moisture Content *, (w)
PL & LL (–), Salinity (s)
and Sampling Blowsft (c)

Other Tests | Blow Counts | Sampler Type | Depth (Feet) | Sampling Interval | Graphic Log | Frozen

Log of HOLE: TP-2
Date Drilled: 10/28/03
Contractor: CE2
Equipment: Hitachi 200LC
GPS Coord.: N61°05'47.2" W160°57'43.2"
Elevation: --

Description

ORGANIC MAT (Pt) Dark brown, moist, w/ forest litter and some Organic Silt (OL)

ORGANIC SILT (OL) Gray to brown, moist, w/ some organic debris

SAND (SP-SM) (Vx) Brown to gray, fine grained sand, micaceous, <5% visible ice

Bottom of pit at 6.5'

Duane Miller & Associates
Job No.: 4149.026
Date: December 2003

LOG of TEST PIT TP-2
Water & Sewer
Tuluksak, Alaska

Plate 3

DUANE MILLER & ASSOCIATES

Project: Water Treatment Plant
DM&A Job No.: 4149.026
Logged By: JJB

Moisture Content *, (w)
PL & LL (–), Salinity (s)
and Sampling Blowsft (c)

Other Tests | Blow Counts | Sampler Type | Depth (Feet) | Sampling Interval | Graphic Log | Frozen

Log of HOLE: TP-3
Date Drilled: 10/28/03
Contractor: CE2
Equipment: Hitachi 200LC
GPS Coord.: N61°05'48.2" W160°57'42.3"
Elevation: --

Description

ORGANIC MAT (Pt) Brown, moist, fine organic mat and root fibers, w/ some Organic Silt (OL)

ORGANIC SILT (OL) Dark brown to gray, moist, w/ some sand and organic debris

SAND (SP-SM) Brown, moist, medium grained

SILTY SAND (SM) Brown, moist, fine to medium grained

Bottom of pit at 11.5'

Duane Miller & Associates
Job No.: 4149.026
Date: December 2003

LOG of TEST PIT TP-3
Water & Sewer
Tuluksak, Alaska

Plate 4

DUANE MILLER & ASSOCIATES

Project: Water Treatment Plant
DM&A Job No.: 4149.026
Logged By: JJB

Moisture Content *, (w)
PL & LL (–), Salinity (s)
and Sampling Blowsft (c)

Other Tests | Blow Counts | Sampler Type | Depth (Feet) | Sampling Interval | Graphic Log | Frozen

Log of HOLE: TP-4
Date Drilled: 10/29/03
Contractor: CE2
Equipment: Hitachi 200LC
GPS Coord.: N61°05'48.4" W160°57'43.3"
Elevation: --

Description

ORGANIC MAT (Pt) Brown, moist, w/ some dark brown Organic Silt (OL)

ORGANIC SILT (OL) Brown, moist, w/ trace to some sand below 3'

SAND (SP-SM) (Vx/c) Gray to brown, medium grained sand, w/ occasional lenses of Silt (ML) to 1/2" thick, 5% to 10% visible ice

Bottom of pit at 8'

Duane Miller & Associates
Job No.: 4149.026
Date: December 2003

LOG of TEST PIT TP-4
Water & Sewer
Tuluksak, Alaska

Plate 5

DUANE MILLER & ASSOCIATES

Project: Water Treatment Plant
DM&A Job No.: 4149.026
Logged By: JJB

Moisture Content *, (w)
PL & LL (–), Salinity (s)
and Sampling Blowsft (c)

Other Tests | Blow Counts | Sampler Type | Depth (Feet) | Sampling Interval | Graphic Log | Frozen

Log of HOLE: TP-5
Date Drilled: 10/29/03
Contractor: CE2
Equipment: Hitachi 200LC
GPS Coord.: N61°05'48.6" W160°57'40.4"
Elevation: --

Description

ORGANIC MAT (Pt) Brown, moist, w/ some Organic Silt (OL)

ORGANIC SILT (OL) Dark brown and gray, w/ trace to some sand below 1.5'

SAND (SP-SM) Gray, moist, medium sand, w/ occasional lenses of Silt (ML) to 1" thick

SILTY SAND (SM) Brown, moist, fine to medium grained

Bottom of pit at 14.5'

Duane Miller & Associates
Job No.: 4149.026
Date: December 2003

LOG of TEST PIT TP-5
Water & Sewer
Tuluksak, Alaska

Plate 6

DUANE MILLER & ASSOCIATES

Project: Water Treatment Plant
DM&A Job No.: 4149.026
Logged By: JJB

Moisture Content *, (w)
PL & LL (–), Salinity (s)
and Sampling Blowsft (c)

Other Tests | Blow Counts | Sampler Type | Depth (Feet) | Sampling Interval | Graphic Log | Frozen

Log of HOLE: TP-6
Date Drilled: 10/29/03
Contractor: CE2
Equipment: Hitachi 200LC
GPS Coord.: N61°05'48.1" W160°57'40.0"
Elevation: --

Description

ORGANIC MAT (Pt) Dark brown, moist, w/ forest litter and some Organic Silt (OL)

ORGANIC SILT (OL) Gray to brown, moist, 3" buried organic layer at 2'

Frozen lense (Nbn) 2.5' to 4.3'

SILTY SAND (SM) Gray, moist, medium sand, w/ occasional lenses of Silt (ML) to 1/2" thick

Bottom of pit at 11'

Duane Miller & Associates
Job No.: 4149.026
Date: December 2003

LOG of TEST PIT TP-6
Water & Sewer
Tuluksak, Alaska

Plate 7

RECORD DRAWING CERTIFICATE

THESE DRAWINGS REFLECT RECORDED INFORMATION OBTAINED DURING CONSTRUCTION. INFORMATION PROVIDED HEREIN IS ACCURATE TO THE BEST OF MY KNOWLEDGE.

NAME _____ DATE _____

SCALE:

2010-11 WASTEWATER SYSTEM IMPROVEMENTS

TEST HOLE BORING LOGS

TULUKSAK, ALASKA

CE2 ENGINEERS, INC.
PO BOX 223246 ANCHORAGE, AK 99503 PH: 907-349-1019 FAX: 907-349-1015

REVISION	BY	DATE

Project No. _____
Date JUNE 2009
Designed LAP
Drawn GM
Approved LAP

Sheet No. G3.1

G:\ACAD\TULUKSAK\TL0901 2008 Waste water disposal area\G3.0 TO G3.5.dwg, 1/11/2011 1:02:29 PM, Flash, LANIER MP C2050_LD520C PCL 6BLK WHIT.pc3

DUANE MILLER & ASSOCIATES

Project: Water & Sewer
DM&A Job No.: 4149.026
Logged By: N Luzny

Moisture Content % (●), Pl. & LL (–H) Salinity (□) and Sampling Blowsft (□)

Other Tests | Blow Counts | Sampler Type | Depth (Feet) | Sampling Interval | Graphic Log | Frozen

Log of HOLE: UC-1

Date Drilled: 12/16/04
Contractor: CE2
Equipment: Hitachi EX300LC
GPS Coord.: N 61°05.617' W 160°57.684'
Elevation: -

Description

ORGANIC MAT (Pt) Dark brown, moist, fibrous, w/ some Organic Silt (OL)

ORGANIC SILT (OL) Brown, moist, w/ fibrous organics, frozen lense (ice) at 3" to 3.6'

SAND (SP-SM) Brown, moist, medium grained

SILTY SAND (SM) Brown, moist, medium grained

Duane Miller & Associates
Job No.: 4149.026
Date: February 2005

LOG of TEST PIT UC-1
Water & Sewer
Tuluksak, Alaska

Plate 8

DUANE MILLER & ASSOCIATES

Project: Water & Sewer
DM&A Job No.: 4149.026
Logged By: N Luzny

Moisture Content % (●), Pl. & LL (–H) Salinity (□) and Sampling Blowsft (□)

Other Tests | Blow Counts | Sampler Type | Depth (Feet) | Sampling Interval | Graphic Log | Frozen

Log of HOLE: UC-2

Date Drilled: 12/16/04
Contractor: CE2
Equipment: Hitachi EX300LC
GPS Coord.: N 61°05.638' W 160°57.713'
Elevation: -

Description

ORGANIC MAT (Pt) Brown, moist

ORGANIC SILT (OL) Dark brown, moist, w/ trace sand and some organic debris

SILT (ML) Gray to brown, moist, w/ trace fine sand

SILTY SAND (SM) Brown, moist, medium grained

Duane Miller & Associates
Job No.: 4149.026
Date: February 2005

LOG of TEST PIT UC-2
Water & Sewer
Tuluksak, Alaska

Plate 9

DUANE MILLER & ASSOCIATES

Project: Water & Sewer
DM&A Job No.: 4149.026
Logged By: N Luzny

Moisture Content % (●), Pl. & LL (–H) Salinity (□) and Sampling Blowsft (□)

Other Tests | Blow Counts | Sampler Type | Depth (Feet) | Sampling Interval | Graphic Log | Frozen

Log of HOLE: UC-3

Date Drilled: 12/16/04
Contractor: CE2
Equipment: Hitachi EX300LC
GPS Coord.: N 61°05.623' W 160°57.703'
Elevation: -

Description

ORGANIC MAT (Pt) Brown, moist

ORGANIC SILT (OL) Dark brown, moist, w/ trace sand and some organic debris

SAND (SP-SM) Brown, moist, w/ trace fine gravel

SILTY SAND (SM) Brown, moist, medium grained

Duane Miller & Associates
Job No.: 4149.026
Date: February 2005

LOG of TEST PIT UC-3
Water & Sewer
Tuluksak, Alaska

Plate 10

DUANE MILLER & ASSOCIATES

Project: Water & Sewer
DM&A Job No.: 4149.026
Logged By: N Luzny

Moisture Content % (●), Pl. & LL (–H) Salinity (□) and Sampling Blowsft (□)

Other Tests | Blow Counts | Sampler Type | Depth (Feet) | Sampling Interval | Graphic Log | Frozen

Log of HOLE: LF-1

Date Drilled: 12/16/04
Contractor: CE2
Equipment: Hitachi EX300LC
GPS Coord.: N 61°05.566' W 160°57.195'
Elevation: -

Description

ORGANIC MAT (Pt) (Fill) Dark brown, fibrous, w/ some Organic Silt (OL)

ORGANIC SILT (OL) Dark brown, w/ some organic debris, unfrozen below 1.5'

SILTY SAND (SM) Brown, moist, fine to medium grained

SAND (SP-SM) Brown, moist, fine grained

Duane Miller & Associates
Job No.: 4149.026
Date: February 2005

LOG of TEST PIT LF-1
Water & Sewer
Tuluksak, Alaska

Plate 11

DUANE MILLER & ASSOCIATES

Project: Water & Sewer
DM&A Job No.: 4149.026
Logged By: N Luzny

Moisture Content % (●), Pl. & LL (–H) Salinity (□) and Sampling Blowsft (□)

Other Tests | Blow Counts | Sampler Type | Depth (Feet) | Sampling Interval | Graphic Log | Frozen

Log of HOLE: LF-2

Date Drilled: 12/16/04
Contractor: CE2
Equipment: Hitachi EX300LC
GPS Coord.: N 61°05.526' W 160°57.161'
Elevation: -

Description

ORGANIC MAT (Pt) (Fill) Dark brown, fibrous, w/ some Organic Silt (OL)

ORGANIC SILT (OL) Brown, moist

SAND (SP-SM) Brown, moist, fine to medium grained

SILTY SAND (SM) Brown, moist, fine grained, w/ trace organics

SAND (SP) Brown, moist, medium grained

Duane Miller & Associates
Job No.: 4149.026
Date: February 2005

LOG of TEST PIT LF-2
Water & Sewer
Tuluksak, Alaska

Plate 12

DUANE MILLER & ASSOCIATES

Project: Water & Sewer
DM&A Job No.: 4149.026
Logged By: N Luzny

Moisture Content % (●), Pl. & LL (–H) Salinity (□) and Sampling Blowsft (□)

Other Tests | Blow Counts | Sampler Type | Depth (Feet) | Sampling Interval | Graphic Log | Frozen

Log of HOLE: LF-3

Date Drilled: 12/14/04
Contractor: CE2
Equipment: Hitachi EX300LC
GPS Coord.: N 61°05.587' W 160°57.225'
Elevation: -

Description

ORGANIC MAT (Pt) Dark brown, moist, fibrous, w/ some Organic Silt (OL)

ORGANIC SILT (OL) Brown, moist, w/ some organic debris

SAND (SP) Brown, moist, w/ occasional interbeds of Silty Sand (SM)

Duane Miller & Associates
Job No.: 4149.026
Date: February 2005

LOG of TEST PIT LF-3
Water & Sewer
Tuluksak, Alaska

Plate 13

RECORD DRAWING CERTIFICATE

THESE DRAWINGS REFLECT RECORDED INFORMATION OBTAINED DURING CONSTRUCTION. INFORMATION PROVIDED HEREIN IS ACCURATE TO THE BEST OF MY KNOWLEDGE.

NAME _____ DATE _____

SCALE:

SURVEY GRID, PROJECTION ORIGINAL DRAWING

0 1"

IF NOT ONE INCH, ADJUST SCALE ACCORDINGLY

VILLAGE SAFE WATER PLAN

STATE OF ALASKA 49TH

2010-11 WASTEWATER SYSTEM IMPROVEMENTS

TEST HOLE BORING LOGS

TULUKSAK, ALASKA

CE2 ENGINEERS, INC.

PO BOX 230568 ANCHORAGE, AK 99523 PH: 907-349-1019 FAX: 907-349-1013

REVISION	BY	DATE

Project No. _____
Date JUNE 2009
Designed LAP
Drawn CM
Approved LAP

Sheet No.
G3.2

G:\ACAD\TULUKSAK\TLT0901 2008 Waste water disposal area\G3.0 TO G3.5.dwg, 1/11/2011 1:02:43 PM, Flash, LANIER HP C2050_L0520C PCL 6BLK WHITE.pc3

DUANE MILLER & ASSOCIATES

Project: Water & Sewer
DM&A Job No.: 4149.026
Logged By: N Luzny

Moisture Content % (w)
PL & LL (–+) Salinity (s)
and Sampling Blowsft (c)
0 20 40 60 >80 P200 Other Tests

Blow Counts | Sampler Type | Depth (Feet) | Sampling Interval | Sampling Results | Graphic Log | Frozen

Log of HOLE: S-1

Date Drilled: 12/16/04
Contractor: CE2
Equipment: Hitachi EX300LC
GPS Coord.: N 61°05.695' W 160°57.393'
Elevation: -

Description

SANDY SILT (ML) (Nbn) Brown, w/ medium grained sand

SILTY SAND (SM) Brown, moist, fine to medium grained

Refusal on permafrost at 9.8'

Duane Miller & Associates
Job No.: 4149.026
Date: February 2005

LOG of TEST PIT S-1
Water & Sewer
Tuluksak, Alaska

Plate 14

DUANE MILLER & ASSOCIATES

Project: Water & Sewer
DM&A Job No.: 4149.026
Logged By: N Luzny

Moisture Content % (w)
PL & LL (–+) Salinity (s)
and Sampling Blowsft (c)
0 20 40 60 >80 P200 Other Tests

Blow Counts | Sampler Type | Depth (Feet) | Sampling Interval | Sampling Results | Graphic Log | Frozen

Log of HOLE: S-2

Date Drilled: 12/16/04
Contractor: CE2
Equipment: Hitachi EX300LC
GPS Coord.: N 61°05.790' W 160°57.541'
Elevation: -

Description

ORGANIC MAT (Pt) (Nb) Brown, fibrous organics w/ some Organic Silt (OL)

ORGANIC SILT (OL) (Nbn) Dark brown, w/ some organic debris, unfrozen below 1.5'

SAND (SP-SM) Brown, medium grained sand, w/ trace fine gravel

Duane Miller & Associates
Job No.: 4149.026
Date: February 2005

LOG of TEST PIT S-2
Water & Sewer
Tuluksak, Alaska

Plate 15

DUANE MILLER & ASSOCIATES

Project: Water & Sewer
DM&A Job No.: 4149.026
Logged By: N Luzny

Moisture Content % (w)
PL & LL (–+) Salinity (s)
and Sampling Blowsft (c)
0 20 40 60 >80 P200 Other Tests

Blow Counts | Sampler Type | Depth (Feet) | Sampling Interval | Sampling Results | Graphic Log | Frozen

Log of HOLE: S-3

Date Drilled: 12/17/04
Contractor: CE2
Equipment: Hitachi EX300LC
GPS Coord.: N 61°05.790' W 160°57.550'
Elevation: -

Description

ORGANIC MAT (Pt) (Nb) Dark brown, fibrous, w/ some Organic Silt (OL)

ORGANIC SILT (OL) Dark brown, w/ some fibrous organics, unfrozen below 1.5'

SILT (ML) Brown to gray, moist, w/ some fine sand and trace organics

SILTY SAND (SM) Brown, moist, fine grained

Refusal on permafrost at 7'

Duane Miller & Associates
Job No.: 4149.026
Date: February 2005

LOG of TEST PIT S-3
Water & Sewer
Tuluksak, Alaska

Plate 16

DUANE MILLER & ASSOCIATES

Project: Water & Sewer
DM&A Job No.: 4149.026
Logged By: N Luzny

Moisture Content % (w)
PL & LL (–+) Salinity (s)
and Sampling Blowsft (c)
0 20 40 60 >80 P200 Other Tests

Blow Counts | Sampler Type | Depth (Feet) | Sampling Interval | Sampling Results | Graphic Log | Frozen

Log of HOLE: S-4

Date Drilled: 12/17/04
Contractor: CE2
Equipment: Hitachi EX300LC
GPS Coord.: N 61°05.959' W 160°57.628'
Elevation: -

Description

SILTY GRAVEL (GM) (Nbn) Brown, fine gravel, occasional clasts to 1" diameter, w/ medium to coarse sand, very well bonded

SILT (ML) (Nbn) Gray to brown, w/ some sand and trace fine gravel, unfrozen below 3'

SILTY SAND (SM) Brown, moist, fine grained

Duane Miller & Associates
Job No.: 4149.026
Date: February 2005

LOG of TEST PIT S-4
Water & Sewer
Tuluksak, Alaska

Plate 17

DUANE MILLER & ASSOCIATES

Project: Water & Sewer
DM&A Job No.: 4149.026
Logged By: N Luzny

Moisture Content % (w)
PL & LL (–+) Salinity (s)
and Sampling Blowsft (c)
0 20 40 60 >80 P200 Other Tests

Blow Counts | Sampler Type | Depth (Feet) | Sampling Interval | Sampling Results | Graphic Log | Frozen

Log of HOLE: S-5

Date Drilled: 12/17/04
Contractor: CE2
Equipment: Hitachi EX300LC
GPS Coord.: N 61°05.084' W 160°57.617'
Elevation: -

Description

ORGANIC MAT (Pt) (Nb) Dark brown, w/ some Organic Silt (OL)

ORGANIC SILT (OL) (Nbn) Dark brown, w/ some fibrous organics, unfrozen below 1'

SAND (SP-SM) Brown, moist, fine to medium grained

Duane Miller & Associates
Job No.: 4149.026
Date: February 2005

LOG of TEST PIT S-5
Water & Sewer
Tuluksak, Alaska

Plate 18

DUANE MILLER & ASSOCIATES

Project: Water & Sewer
DM&A Job No.: 4149.026
Logged By: N Luzny

Moisture Content % (w)
PL & LL (–+) Salinity (s)
and Sampling Blowsft (c)
0 20 40 60 >80 P200 Other Tests

Blow Counts | Sampler Type | Depth (Feet) | Sampling Interval | Sampling Results | Graphic Log | Frozen

Log of HOLE: S-6

Date Drilled: 12/17/04
Contractor: CE2
Equipment: Hitachi EX300LC
GPS Coord.: N 61°05.089' W 160°57.685'
Elevation: -

Description

SILTY SAND (GM) (Nbn) Brown, medium to coarse sand, w/ some fine to coarse gravel

ORGANIC SILT (OL) (Nbn) Brown, w/ organics and woody debris, trace gravel at 5'

SAND (SP-SM) Brown, moist, fine grained

Duane Miller & Associates
Job No.: 4149.026
Date: February 2005

LOG of TEST PIT S-6
Water & Sewer
Tuluksak, Alaska

Plate 19

RECORD DRAWING CERTIFICATE

THESE DRAWINGS REFLECT RECORDED INFORMATION OBTAINED DURING CONSTRUCTION. INFORMATION PROVIDED HEREIN IS ACCURATE TO THE BEST OF MY KNOWLEDGE.

NAME _____ DATE _____

SCALE:

DATE ON PLAN WAS ON ORIGINAL DRAWING

IF NOT ONE INCH ON THIS SHEET, ADJUST SCALE ACCORDINGLY

2010-11 WASTEWATER SYSTEM IMPROVEMENTS

TEST HOLE BORING LOGS

TULUKSAK, ALASKA

CE2 ENGINEERS, INC.
PO BOX 223948 ANCHORAGE, AK 99522 PH 907-349-1019 FAX 907-349-1015

REVISION	BY	DATE

Project No. _____
Date JUNE 2009
Designed LAP
Drawn CM
Approved LAP

Sheet No.
G3.3

G:\ACAD\TULUKSAK\TLT0901 2008 Waste water disposal area\G3.0 TO G3.5.dwg, 1/11/2011 1:03:10 PM, Flash, LANIER HP C2050, LD520C PCL 6BLK WHITE.pc3

DUANE MILLER & ASSOCIATES

Project: Water & Sewer
DM&A Job No.: 4149.026
Logged By: N Luzny

Moisture Content % (M)
PL & LL (--) Salinity (s)
and Sampling Blows/ft (C)
0 20 40 60 >80 P200

Other Tests | Blow Counts | Sampler Type | Depth (Feet) | Sampling Interval | Graphic Log | Frozen

Log of HOLE: S-7

Date Drilled: 12/17/04
Contractor: CE2
Equipment: Hitachi EX300LC
GPS Coord.: N 61°05.123' W 160°57.762'
Elevation: -

Description

ORGANIC MAT (Pt) (Hi) Brown, fibrous organics w/ some Organic Silt (OL)

ORGANIC SILT (OL) Dark brown, moist, w/ some organic debris

SILTY SAND (SM) Brown, moist, fine to medium grained, w/ interbedded Sand (SP-SM)

Duane Miller & Associates
Job No.: 4149.026
Date: February 2005

LOG of TEST PIT S-7
Water & Sewer
Tuluksak, Alaska

Plate 20

DUANE MILLER & ASSOCIATES

Project: Water & Sewer
DM&A Job No.: 4149.026
Logged By: N Luzny

Moisture Content % (M)
PL & LL (--) Salinity (s)
and Sampling Blows/ft (C)
0 20 40 60 >80 P200

Other Tests | Blow Counts | Sampler Type | Depth (Feet) | Sampling Interval | Graphic Log | Frozen

Log of HOLE: S-8

Date Drilled: 12/17/04
Contractor: CE2
Equipment: Hitachi EX300LC
GPS Coord.: N 61°06.084' W 160°57.664'
Elevation: -

Description

ORGANIC MAT (Pt) Brown, moist

ORGANIC SILT (OL) Brown, moist, w/ organic debris

SAND (SP) Brown, moist, fine grained

SILTY SAND (SM) Brown, moist, fine to medium grained

Duane Miller & Associates
Job No.: 4149.026
Date: February 2005

LOG of TEST PIT S-8
Water & Sewer
Tuluksak, Alaska

Plate 21

DUANE MILLER & ASSOCIATES

Project: Water & Sewer
DM&A Job No.: 4149.026
Logged By: N Luzny

Moisture Content % (M)
PL & LL (--) Salinity (s)
and Sampling Blows/ft (C)
0 20 40 60 >80 P200

Other Tests | Blow Counts | Sampler Type | Depth (Feet) | Sampling Interval | Graphic Log | Frozen

Log of HOLE: S-9

Date Drilled: 12/17/04
Contractor: CE2
Equipment: Hitachi EX300LC
GPS Coord.: N 61°05.035' W 160°57.495'
Elevation: -

Description

ORGANIC MAT (Pt) (Hi) Brown, fibrous organics w/ some Organic Silt (OL)

ORGANIC SILT (OL) (Fibr) Dark brown, w/ some organic debris, unfrozen below 1.4'

SILT (ML) Gray to brown, moist, w/ trace fine sand

SILTY SAND (SM) Brown, moist, fine grained
Refusal on permafrost at 8.5'

Duane Miller & Associates
Job No.: 4149.026
Date: February 2005

LOG of TEST PIT S-9
Water & Sewer
Tuluksak, Alaska

Plate 22

DUANE MILLER & ASSOCIATES

Project: Water & Sewer
DM&A Job No.: 4149.026
Logged By: N Luzny

Moisture Content % (M)
PL & LL (--) Salinity (s)
and Sampling Blows/ft (C)
0 20 40 60 >80 P200

Other Tests | Blow Counts | Sampler Type | Depth (Feet) | Sampling Interval | Graphic Log | Frozen

Log of HOLE: S-10

Date Drilled: 12/17/04
Contractor: CE2
Equipment: Hitachi EX300LC
GPS Coord.: N 61°05.102' W 160°57.485'
Elevation: -

Description

ICE (ICE)

ORGANIC SILT (OL) Brown to gray, moist, w/ some fibrous organic and laddy debris

SILT (ML) Gray to brown, moist, w/ trace fine sand

SAND (SP-SM) Brown, moist, fine grained

Duane Miller & Associates
Job No.: 4149.026
Date: February 2005

LOG of TEST PIT S-10
Water & Sewer
Tuluksak, Alaska

Plate 23

DUANE MILLER & ASSOCIATES

Project: Water & Sewer
DM&A Job No.: 4149.026
Logged By: N Luzny

Moisture Content % (M)
PL & LL (--) Salinity (s)
and Sampling Blows/ft (C)
0 20 40 60 >80 P200

Other Tests | Blow Counts | Sampler Type | Depth (Feet) | Sampling Interval | Graphic Log | Frozen

Log of HOLE: S-11

Date Drilled: 12/17/04
Contractor: CE2
Equipment: Hitachi EX300LC
GPS Coord.: N 61°05.055' W 160°57.299'
Elevation: -

Description

SILTY SAND (SM) (Fibr) Brown, medium to coarse sand, w/ some gravel, very well bonded

ORGANIC SILT (OL) (Fibr) Dark brown to gray, w/ some organics, unfrozen below 2.8'

SAND (SP) Brown, moist, fine grained

Refusal on permafrost at 10.5'

Duane Miller & Associates
Job No.: 4149.026
Date: February 2005

LOG of TEST PIT S-11
Water & Sewer
Tuluksak, Alaska

Plate 24

DUANE MILLER & ASSOCIATES

Project: Water & Sewer
DM&A Job No.: 4149.026
Logged By: N Luzny

Moisture Content % (M)
PL & LL (--) Salinity (s)
and Sampling Blows/ft (C)
0 20 40 60 >80 P200

Other Tests | Blow Counts | Sampler Type | Depth (Feet) | Sampling Interval | Graphic Log | Frozen

Log of HOLE: S-12

Date Drilled: 12/18/04
Contractor: CE2
Equipment: Hitachi EX300LC
GPS Coord.: N 61°05.917' W 160°57.608'
Elevation: -

Description

ORGANIC MAT (Pt) (Hi) Dark brown, fibrous, w/ some Organic Silt (OL)

ORGANIC SILT (OL) Brown to gray, moist, w/ some fine sand and trace organics

SILT (ML) Gray to brown, moist, w/ trace fine sand

SAND (SP-SM) Brown, moist, fine grained

Duane Miller & Associates
Job No.: 4149.026
Date: February 2005

LOG of TEST PIT S-12
Water & Sewer
Tuluksak, Alaska

Plate 25

RECORD DRAWING CERTIFICATE
THESE DRAWINGS REFLECT RECORDED INFORMATION OBTAINED DURING CONSTRUCTION. INFORMATION PROVIDED HEREIN IS ACCURATE TO THE BEST OF MY KNOWLEDGE.
NAME DATE

SCALE:

2010-11 WASTEWATER SYSTEM IMPROVEMENTS

TEST HOLE BORING LOGS

TULUKSAK, ALASKA

CE2 ENGINEERS, INC.
PO BOX 230244 ANCHORAGE, AK 99523 PH: 907-349-1016 FAX: 907-349-1015

REVISION	BY	DATE

Project No. ____
Date JUNE 2009
Designed LAP
Drawn CM
Approved LAP

Sheet No.
G3.4

DUANE MILLER & ASSOCIATES

Project: Water & Sewer
DMA Job No.: 4149.026
Logged By: N Lucny

Moisture Content % (w), PL & LL (–+) Salinity (s) and Sampling Blowsft (C)
0 20 40 60 >80 P200 Other Tests

Blow Counts | Sampler Type | Depth (Feet) | Sampling Interval | Graphic Log | Frozen

Log of HOLE: S-13

Date Drilled: 12/16/04
Contractor: CE2
Equipment: Hitachi EX300LC
GPS Coord.: N 61°05.885' W 150°56.914'
Elevation: -

Description

ORGANIC MAT (Pt) (Hf) Brown, fibrous organics w/ some Organic Silt (OL)

ORGANIC SILT (OL) Brown, moist, w/ fibrous organics and woody debris

SILT (ML) Gray, moist, w/ some fine to medium sand

Refusal on permafrost at 8'

Duane Miller & Associates
Job No.: 4149.026
Date: February 2005

LOG of TEST PIT S-13
Water & Sewer
Tuluksak , Alaska

Plate 26

DUANE MILLER & ASSOCIATES

Project: Water & Sewer
DMA Job No.: 4149.026
Logged By: N Lucny

Moisture Content % (w), PL & LL (–+) Salinity (s) and Sampling Blowsft (C)
0 20 40 60 >80 P200 Other Tests

Blow Counts | Sampler Type | Depth (Feet) | Sampling Interval | Graphic Log | Frozen

Log of HOLE: S-14

Date Drilled: 12/16/04
Contractor: CE2
Equipment: Hitachi EX300LC
GPS Coord.: N 61°05.838' W 150°56.722'
Elevation: -

Description

ORGANIC MAT (Pt) (Hf) Brown, fibrous organics w/ some Organic Silt (OL)

ORGANIC SILT (OL) Brown to gray, moist, w/ some fine sand and trace organics

SILT (ML) Gray, moist, w/ some fine to medium sand

SAND (SP) Brown, moist, fine grained, w/ trace organics

Duane Miller & Associates
Job No.: 4149.026
Date: February 2005

LOG of TEST PIT S-14
Water & Sewer
Tuluksak , Alaska

Plate 27

DUANE MILLER & ASSOCIATES

Project: Water & Sewer
DMA Job No.: 4149.026
Logged By: N Lucny

Moisture Content % (w), PL & LL (–+) Salinity (s) and Sampling Blowsft (C)
0 20 40 60 >80 P200 Other Tests

Blow Counts | Sampler Type | Depth (Feet) | Sampling Interval | Graphic Log | Frozen

Log of HOLE: S-15

Date Drilled: 12/16/04
Contractor: CE2
Equipment: Hitachi EX300LC
GPS Coord.: N 61°05.828' W 150°56.780'
Elevation: -

Description

ORGANIC SILT (OL) (Hbr) Brown, w/ some organics, saturated below 1.4'

SILT (ML) Gray to brown, moist, w/ some fine to medium sand

SAND (SP) Brown, moist, fine to medium grained

Duane Miller & Associates
Job No.: 4149.026
Date: February 2005

LOG of TEST PIT S-15
Water & Sewer
Tuluksak , Alaska

Plate 28

RECORD DRAWING CERTIFICATE

THESE DRAWINGS REFLECT RECORDED INFORMATION OBTAINED DURING CONSTRUCTION. INFORMATION PROVIDED HEREIN IS ACCURATE TO THE BEST OF MY KNOWLEDGE.

NAME _____ DATE _____

SCALE:

DRAWING SCALE IS INDICATED ON EACH DRAWING

IF NOT ONE INCH ON THIS SHEET, ADJUST SCALES ACCORDINGLY

VILLAGE SAFE WATER — ALASKA

STATE OF ALASKA — 49171 — REGISTERED PROFESSIONAL ENGINEER — NOT VALID WITHOUT SIGNATURE AND SEAL

2010-11 WASTEWATER SYSTEM IMPROVEMENTS

TEST HOLE BORING LOGS

TULUKSAK, ALASKA

CE2 ENGINEERS, INC.
PO BOX 232044 ANCHORAGE, AK 99523 PH: 907-349-9310 FAX: 907-349-1019

REVISION	BY	DATE

Project No. _____
Date JUNE 2009
Designed LAP
Drawn CJI
Approved LAP

Sheet No.
G3.5

G:\ACAD\TULUKSAK\TL70901 2008 Waste water disposal area\G3.0 TO G3.5.dwg, 1/11/2011 1:03:41 PM, Flash, LANIER MP C2050_LD520C PCL 6BLK WHITE.pc3

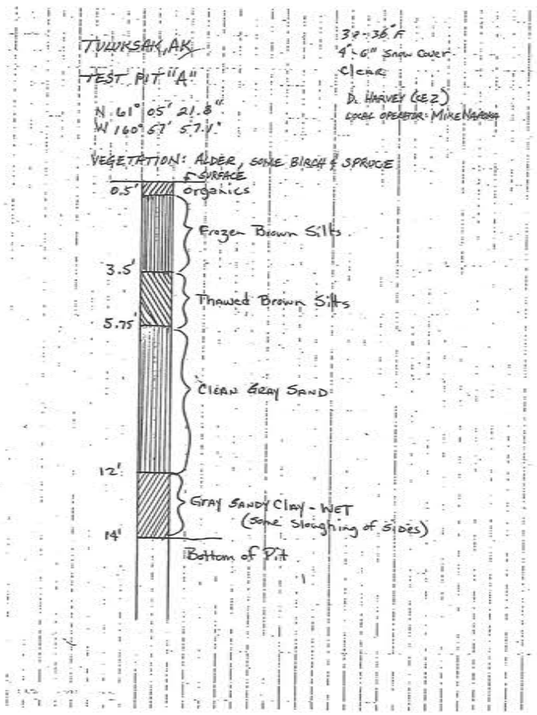

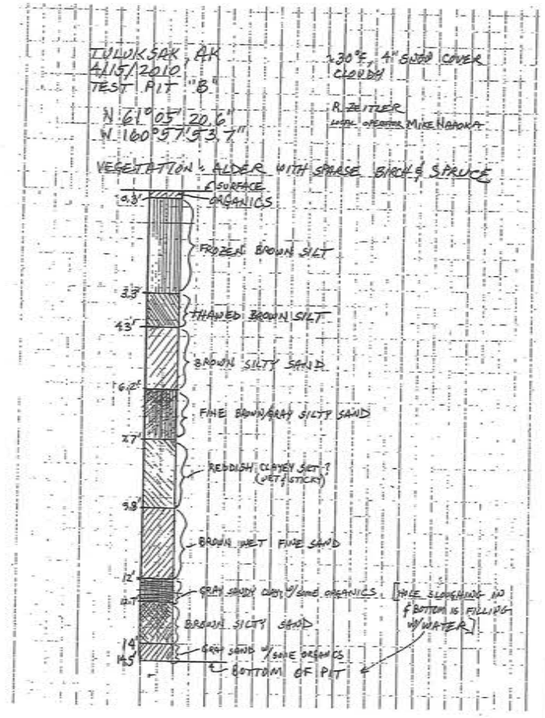

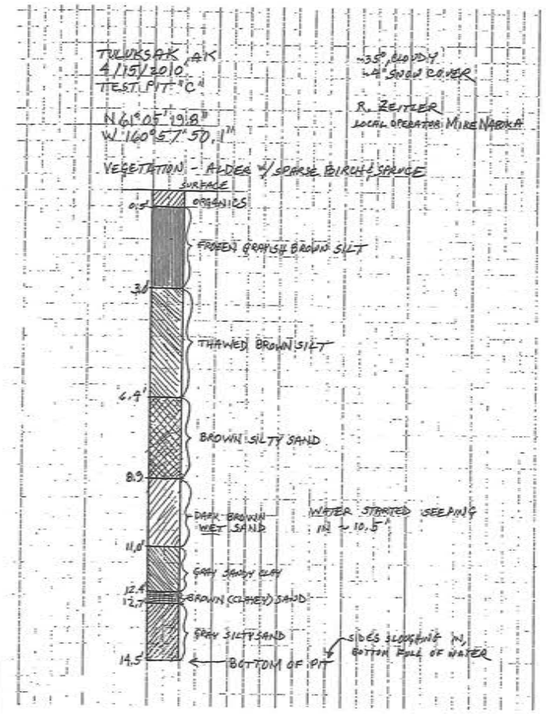

TULUKSAK – Alternate Lagoon Site Investigation
Test Hole Logs, 29 July 2013
M. Erdman, CE2 Engineers

TH – TLT 1
0-2' Organics
2-6' Silty SAND
6-10' SAND (Frozen @ 8')
Seeps @ 6-8'

TH – TLT2
0-1' Organics
1-6' Silty SAND
6-8.5' SAND (Frozen)

TH – TLT3
0-1' Organics
1-5' Silty SAND
5-10' (Discontinuously Frozen)

TH – TLT4
0-1.5' Organics
1.5-10' Silty SAND
(Frozen @ 5')

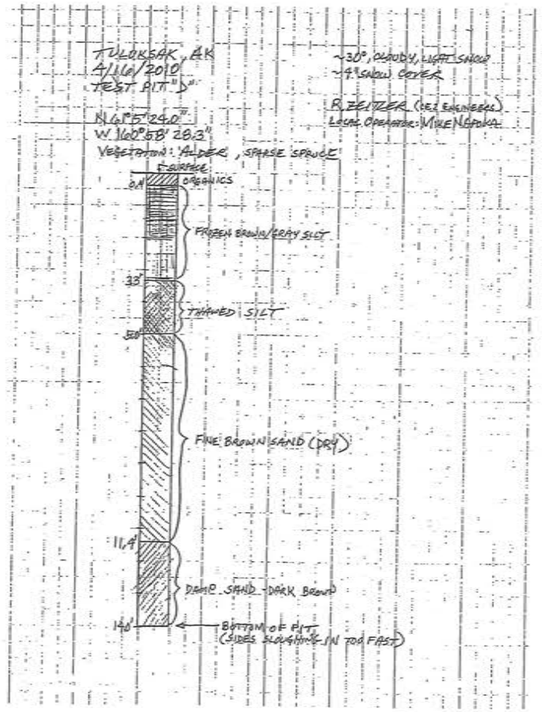

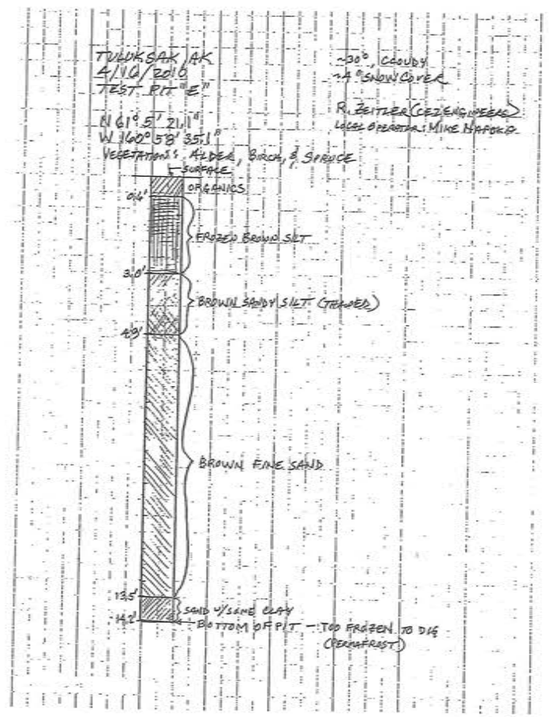

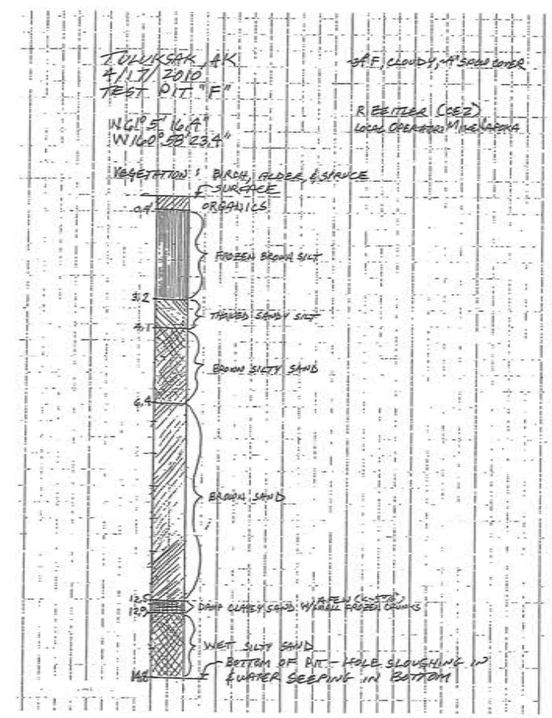

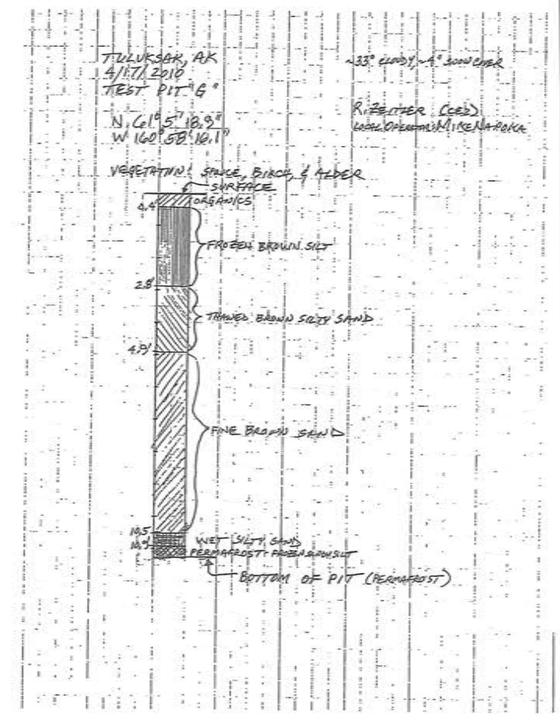

RECORD DRAWING CERTIFICATE
THESE DRAWINGS REFLECT RECORDED INFORMATION OBTAINED DURING CONSTRUCTION. INFORMATION PROVIDED HEREIN IS ACCURATE TO THE BEST OF MY KNOWLEDGE.
NAME DATE

SCALE:
BAR IS ONE INCH ON ORIGINAL DRAWING
0 1"
IF NOT ONE INCH ON THIS SHEET, ADJUST SCALES ACCORDINGLY

WILLIAM SEALE WATER SAFE ALASKA

STATE OF ALASKA 49TH Michael R. Erdman No.6252 REGISTERED PROFESSIONAL ENGINEER
5/7/14

2010-11 WASTEWATER SYSTEM IMPROVEMENTS

TEST HOLE BORING LOGS

TULUKSAK, ALASKA

CE2 ENGINEERS, INC.
PO BOX 232048 ANCHORAGE, AK 99523 PH: 907-349-1010 FAX: 907-349-1015

REVISION	BY	DATE

Project No. ____ Date APRIL 2014
Designed ____ LAP
Drawn ____ CM
Approved ____ LAP

Sheet No.
G3.6

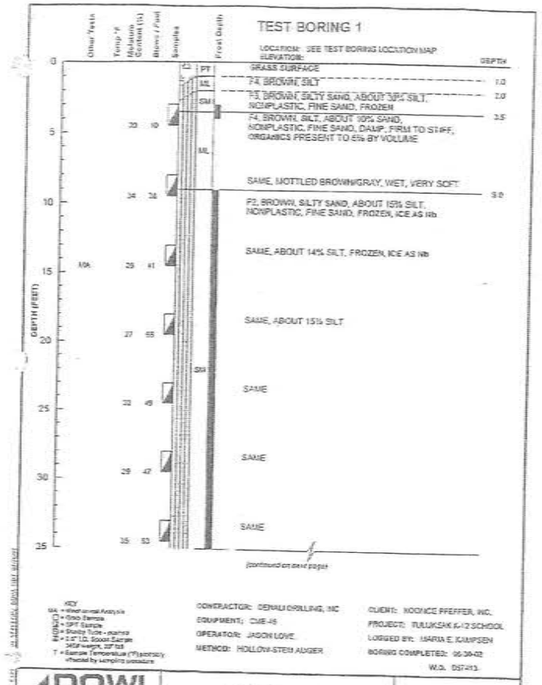

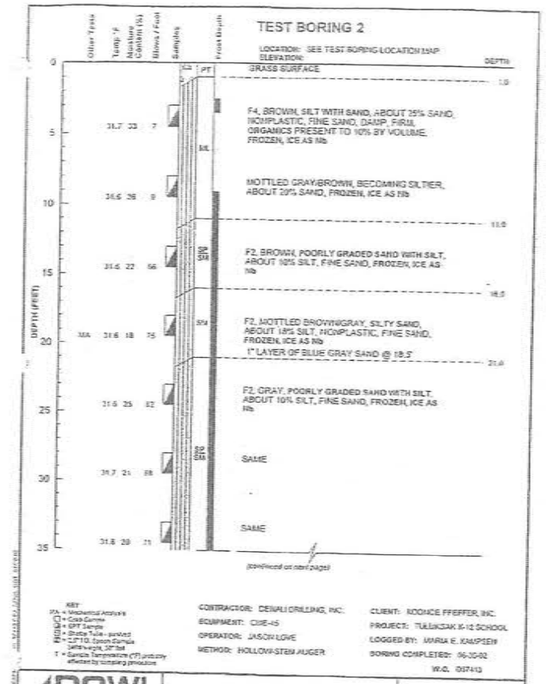

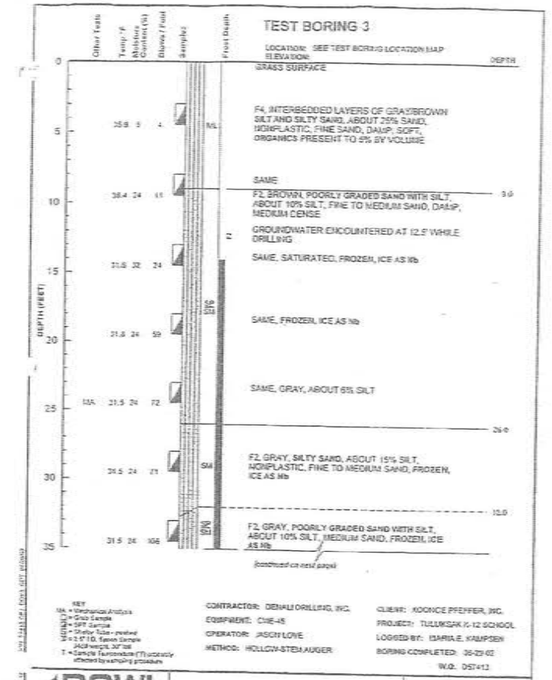

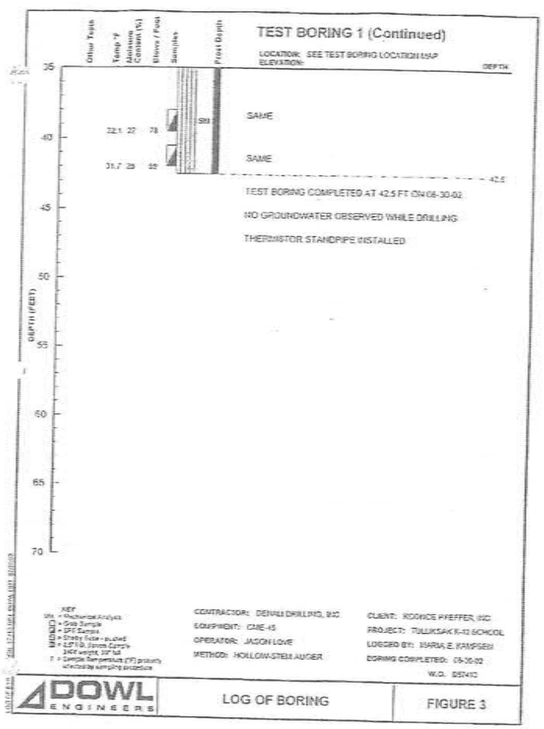

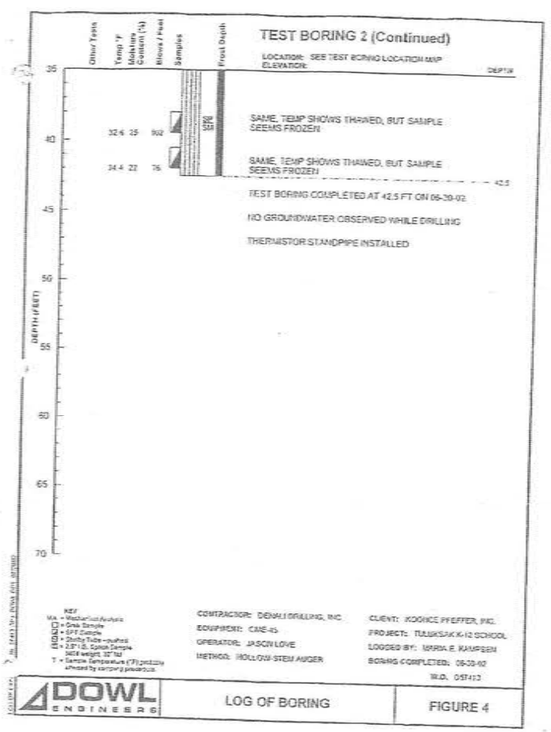

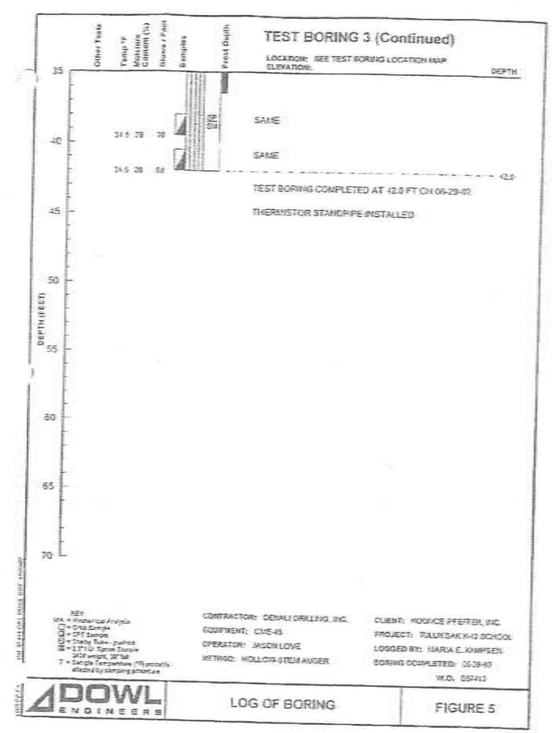

RECORD DRAWING CERTIFICATE

THESE DRAWINGS REFLECT RECORDED INFORMATION OBTAINED DURING CONSTRUCTION. INFORMATION PROVIDED HEREIN IS ACCURATE TO THE BEST OF MY KNOWLEDGE.

NAME _____ DATE _____

SCALE:

2010-11 WASTEWATER SYSTEM IMPROVEMENTS

TEST HOLE BORING LOGS

TULUKSAK, ALASKA

CE2 ENGINEERS, INC.
PO BOX 230594 ANCHORAGE, AK 99523 PH 907-349-1010 FAX 907-349-1015

REVISION	BY	DATE

Project No. _____ Date JUNE 2009
Designed LAP
Drawn CM
Approved LAP

Sheet No. G3.7

G:\ACAD\TULUKSAK\TLT0901 2008 Waste water disposal area\G3.6 TO G3.10.dwg, 1/11/2011 1:05:21 PM, Flash, LANIER HP C2050_LD520C PCL 68LK WHITE.pc3

TEST BORING 4

LOCATION: SEE TEST BORING LOCATION MAP
ELEVATION:

Other Tests	Temp °F	Moisture Content (%)	Blows / Foot	Samples	Frost Depth	DEPTH	Description
					PT	0	GRASS SURFACE
						1.0	
	38.4	27	8		ML		F4, MOTTLED GRAY/BROWN, SILT WITH SAND, ABOUT 20% SAND, NONPLASTIC, FINE SAND, DAMP, FIRM, ORGANICS PRESENT TO 5% BY VOLUME
						6.5	
	34.2	22	14		SM		F4, BROWN, SILTY SAND, ABOUT 16% SAND, NONPLASTIC, FINE SAND, WET, MEDIUM DENSE
						11.0	GROUNDWATER ENCOUNTERED AT 11.0' WHILE DRILLING
	48	24	6		SW		F2, BROWN, POORLY GRADED SAND WITH SILT, ABOUT 10% SILT, FINE SAND, SATURATED, LOOSE
	38.2	23	8				SAME
	43.6	28	9				SAME
						27.0	
	41.1	24	4		SP		MFS, GRAY, POORLY GRADED SAND, ABOUT 5% SILT, FINE TO MEDIUM SAND, SATURATED, VERY LOOSE
	30.5	21	2				SAME

(continued on next page)

KEY
- Grab Sample
- SPT Sample
- Shelby Tube - pushed
- 2.5" I.D. Spoon Sample (140# weight, 30" fall
- T = Sample Temperature (°F) possibly affected by sampling procedure

CONTRACTOR: DENALI DRILLING, INC.
EQUIPMENT: CME-45
OPERATOR: JASON LOVE
METHOD: HOLLOW-STEM AUGER

CLIENT: KOONCE PFEFFER, INC.
PROJECT: TULUKSAK K-12 SCHOOL
LOGGED BY: MARIA E. KAMPSEN
BORING COMPLETED: 06-30-02
W.O. 057413

DOWL ENGINEERS | LOG OF BORING | FIGURE 6

TEST BORING 5

LOCATION: SEE TEST BORING LOCATION MAP
ELEVATION:

Other Tests	Temp °F	Moisture Content (%)	Blows / Foot	Samples	Frost Depth	DEPTH	Description
					PT	0	GRASS SURFACE
						1.0	
	33.4	27	9		ML		F4, BROWN, SILT, BECOMING SANDIER, ABOUT 5% SAND, NONPLASTIC, FINE SAND, STIFF, ORGANICS PRESENT TO 5% BY VOLUME, FROZEN, ICE AS Nb
						6.0	
	42.3	9	8		SP		MFS, BROWN, POORLY GRADED SAND, ABOUT 5% SILT, FINE TO MEDIUM SAND, DAMP, LOOSE, 1/2" SILT LAYER @ 9.5'
						12.0	GROUNDWATER ENCOUNTERED AT 12.0' WHILE DRILLING, FROZEN AT 12.0'
	31.7	28	75		SW		F2, BROWN, POORLY GRADED SAND WITH SILT, ABOUT 10% SILT, NONPLASTIC, FINE SAND, FROZEN, ICE AS Nb
	31.4	32	62				SAME
	31.5	32	74				SAME, GRAY
						27.0	
MA	31.9	31	37		SP		MFS, GRAY, POORLY GRADED SAND, ABOUT 5% SILT, FINE TO MEDIUM SAND, FROZEN, ICE AS Nb
	31.7	32	35				SAME

(continued on next page)

KEY
- MA = Mechanical Analysis
- Grab Sample
- SPT Sample
- Shelby Tube - pushed
- 2.5" I.D. Spoon Sample (140# weight, 30" fall
- T = Sample Temperature (°F) probably affected by sampling procedure

CONTRACTOR: DENALI DRILLING, INC.
EQUIPMENT: CME-45
OPERATOR: JASON LOVE
METHOD: HOLLOW-STEM AUGER

CLIENT: KOONCE PFEFFER, INC.
PROJECT: TULUKSAK K-12 SCHOOL
LOGGED BY: MARIA E. KAMPSEN
BORING COMPLETED: 06-28-02
W.O. 057413

DOWL ENGINEERS | LOG OF BORING | FIGURE 7

TEST BORING 6

LOCATION: SEE TEST BORING LOCATION MAP
ELEVATION:

Other Tests	Temp °F	Moisture Content (%)	Blows / Foot	Samples	Frost Depth	DEPTH	Description
						0	GRAVEL SURFACE
	42	26			FILL		FILL, F2, POORLY GRADED SAND WITH SILT, TRACES OF ORGANICS
						2.0	
	31	43	16		ML		F4, BROWN, SILT, ABOUT 10% SAND, NO TO LOW PLASTICITY, FINE SAND, FROZEN, ICE AS Nb
						7.0	
	41.2	22	11		SP		MFS, BROWN, POORLY GRADED SAND, ABOUT 5% SILT, MEDIUM SAND, WET, MEDIUM DENSE
						11.0	GROUNDWATER ENCOUNTERED AT 11.0' WHILE DRILLING
	26	7					SAME, LOOSE
						17.5	NO SAMPLE TAKEN DUE TO HEAVING SANDS

TEST BORING COMPLETED AT 17.5 FT ON 06-27-02

PVC STANDPIPE INSTALLED

GROUNDWATER MEASURED AT 3.8' ON 06/30/02

KEY
- Grab Sample
- SPT Sample
- Shelby Tube - pushed
- 2.5" I.D. Spoon Sample (140# weight, 30" fall
- T = Sample Temperature (°F) probably affected by sampling procedure

CONTRACTOR: DENALI DRILLING, INC.
EQUIPMENT: CME-45
OPERATOR: JASON LOVE
METHOD: HOLLOW-STEM AUGER

CLIENT: KOONCE PFEFFER, INC.
PROJECT: TULUKSAK K-12 SCHOOL
LOGGED BY: MARIA E. KAMPSEN
BORING COMPLETED: 06-27-02
W.O. 057413

DOWL ENGINEERS | LOG OF BORING | FIGURE 8

TEST BORING 4 (Continued)

LOCATION: SEE TEST BORING LOCATION MAP
ELEVATION:

Other Tests	Temp °F	Moisture Content (%)	Blows / Foot	Samples	Frost Depth	DEPTH	Description
	46.1	23	5		SP		SAME, LOOSE
						45.0	15' OF HEAVE REMOVED - SAMPLER AND RODS LOST - NO RECOVERY

TEST BORING COMPLETED AT 45.0 FT ON 06-30-02

PVC AND THERMISTOR STANDPIPE INSTALLED

GROUNDWATER MEASURED AT 8.5' ON 06/30/02

KEY
- Grab Sample
- SPT Sample
- Shelby Tube - pushed
- 2.5" I.D. Spoon Sample (140# weight, 30" fall
- T = Sample Temperature (°F) probably affected by sampling procedure

CONTRACTOR: DENALI DRILLING, INC.
EQUIPMENT: CME-45
OPERATOR: JASON LOVE
METHOD: HOLLOW-STEM AUGER

CLIENT: KOONCE PFEFFER, INC.
PROJECT: TULUKSAK K-12 SCHOOL
LOGGED BY: MARIA E. KAMPSEN
BORING COMPLETED: 06-30-02
W.O. 057413

DOWL ENGINEERS | LOG OF BORING | FIGURE 6

TEST BORING 5 (Continued)

LOCATION: SEE TEST BORING LOCATION MAP
ELEVATION:

Other Tests	Temp °F	Moisture Content (%)	Blows / Foot	Samples	Frost Depth	DEPTH	Description
	48.4	23	9		SP		SAME, SATURATED, LOOSE
						48.5	

TEST BORING COMPLETED AT 48.5 FT ON 06-28-02

THERMISTOR STANDPIPE INSTALLED

KEY
- MA = Mechanical Analysis
- Grab Sample
- SPT Sample
- Shelby Tube - pushed
- 2.5" I.D. Spoon Sample (140# weight, 30" fall
- T = Sample Temperature (°F) probably affected by sampling procedure

CONTRACTOR: DENALI DRILLING, INC.
EQUIPMENT: CME-45
OPERATOR: JASON LOVE
METHOD: HOLLOW-STEM AUGER

CLIENT: KOONCE PFEFFER, INC.
PROJECT: TULUKSAK K-12 SCHOOL
LOGGED BY: MARIA E. KAMPSEN
BORING COMPLETED: 06-28-02
W.O. 057413

DOWL ENGINEERS | LOG OF BORING | FIGURE 7

TEST BORING 7

LOCATION: SEE TEST BORING LOCATION MAP
ELEVATION:

Other Tests	Temp °F	Moisture Content (%)	Blows / Foot	Samples	Frost Depth	DEPTH	Description
					SP	0	SAND SURFACE
	47.2	9	7		SW		F2, BROWN, POORLY GRADED SAND WITH SILT, ABOUT 10% SILT, MEDIUM SAND, DAMP, LOOSE, 1" SILT LAYER AT 3.3', 0.5" SILT/ORGANICS LAYER AT 4.3'
						2.5	
						4.5	
	37.1	24	7		SP		MFS, BROWN, POORLY GRADED SAND, ABOUT 5% SILT, LOW PLASTICITY, MEDIUM SAND, WET, LOOSE
						11.0	GROUNDWATER ENCOUNTERED AT 11.0' WHILE DRILLING
	42.1	26	19				SAME, SATURATED, MEDIUM DENSE
	26						SAME, HEAVING SANDS
						19.5	

TEST BORING COMPLETED AT 19.5 FT ON 06-29-02

PVC STANDPIPE INSTALLED

GROUNDWATER MEASURED AT 9.7' ON 06/30/02

KEY
- Grab Sample
- SPT Sample
- Shelby Tube - pushed
- 2.5" I.D. Spoon Sample (140# weight, 30" fall
- T = Sample Temperature (°F) probably affected by sampling procedure

CONTRACTOR: DENALI DRILLING, INC.
EQUIPMENT: CME-45
OPERATOR: JASON LOVE
METHOD: HOLLOW-STEM AUGER

CLIENT: KOONCE PFEFFER, INC.
PROJECT: TULUKSAK K-12 SCHOOL
LOGGED BY: MARIA E. KAMPSEN
BORING COMPLETED: 06-29-02
W.O. 057413

DOWL ENGINEERS | LOG OF BORING | FIGURE 9

RECORD DRAWING CERTIFICATE
THESE DRAWINGS REFLECT RECORDED INFORMATION OBTAINED DURING CONSTRUCTION. INFORMATION PROVIDED HEREIN IS ACCURATE TO THE BEST OF MY KNOWLEDGE.
NAME _____ DATE _____

SCALE:

2010-11 WASTEWATER SYSTEM IMPROVEMENTS

TEST HOLE BORING LOGS

TULUKSAK, ALASKA

CE2 ENGINEERS, INC.
PO BOX 230948 ANCHORAGE, AK 99523 PH 907-349-1015 FAX: 907-349-1015

REVISION	BY	DATE

Project No. _____
Date JUNE 2009
Designed LAP
Drawn GM
Approved LAP

Sheet No. G3.8

G:\ACAD\TULUKSAK\TL70901 2008 Waste water disposal area\G3.6 TO G3.10.dwg, 1/11/2011 1:09:33 PM, Flash, LANIER HP C2050_LD520C PCL 6BLK WHITE.pc3

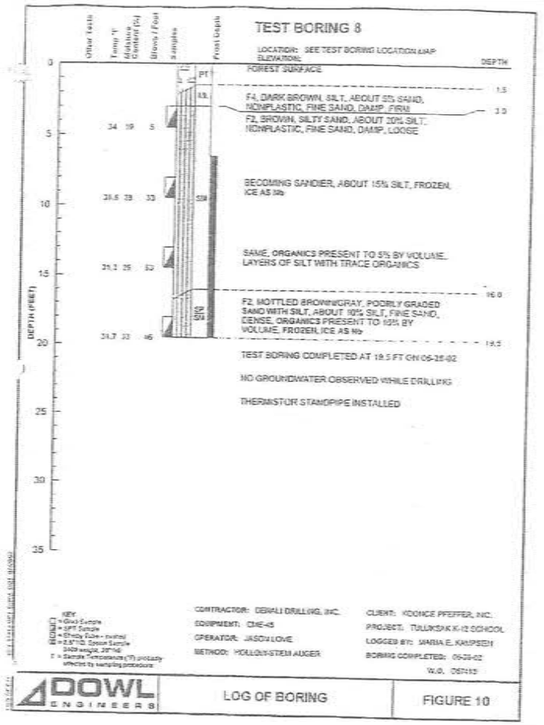

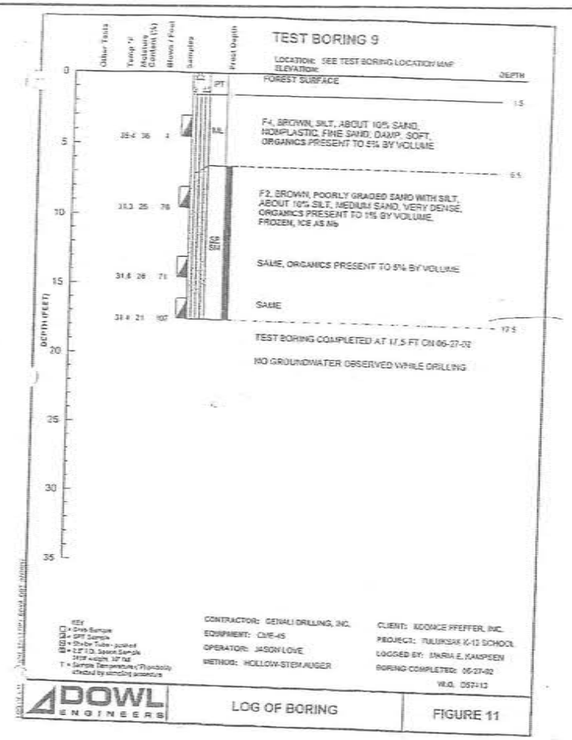

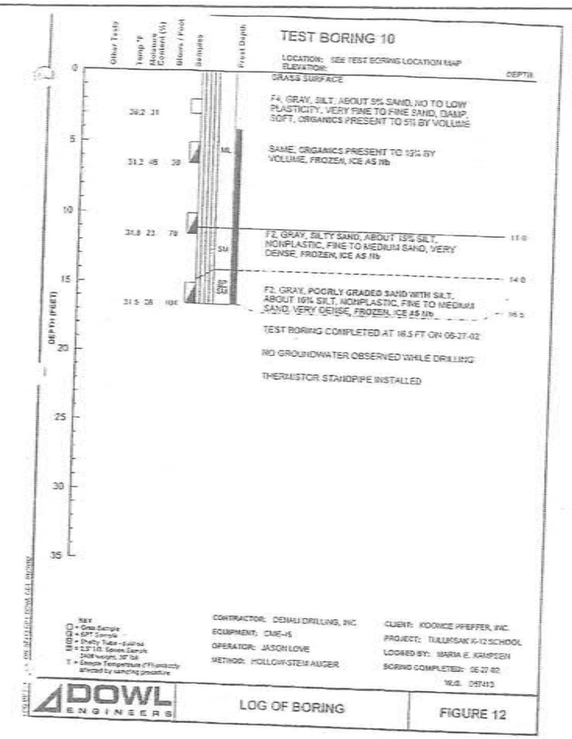

PT-1

SOIL PROFILE/PERCOLATION TEST
DATA FORM

Property Location: **Tuluksak Wastewater Lagoon Site – Percolation/Storage Cell**

Test Pit Number and Location: Test Pit No. 1, N 61°05'31.3", W 160°57'13.9", excavated and monitoring tube set 10/20/2007

Elevations: Existing Ground 18.93'
Bottom/Top of Sand 13.25'
3/6/08 No water noted in test hole to Elev. 7' (12' below existing ground)

Soil Profile:

Depth (inches)	Soil Texture
0 – 12"	Organic Overburden (Pt), fibrous
12" – 68"	Organic silt (OL) and Silty Sand (SM) Mixture, dry
68" -	Poorly graded clean fine sand (SP)

No groundwater encountered

Time	Time Interval (Minutes)	End of Period Measurement (Feet)	Start of Period Measurement (Feet)	Drop in Water Level (Feet)	Percolation Rate (Hrs/Feet)	Remarks
6:45			6.30			Start soaking period.
7:03	0:16	6.37	6.37	0.07	3:48	Start percolation test. Water level 12" above bottom of hole.
7:19	0:15	6.62	6.30	0.25	1:00	
7:34	0:15	6.50	6.32	0.20	1:15	
7:49	0:15	6.54	6.22	0.22	1:08	
8:04	0:15	6.46	6.40	0.24	1:02	
8:20	0:16	6.63	6.37	0.23	1:09	
8:35	0:15	6.61	6.41	0.24	1:02	
8:50	0:15	6.63	6.38	0.22	1:08	
9:05	0:15	6.62		0.24	1:02	End of Test.

Percolation rate = 5.2 minutes per inch

Date of test March 6, 2008 Percolation test by: **Lloyd Persson, P.E.**

** 6/10/08 Water Elev. measured above sand at 14.59' (seasonal high groundwater).

PT-2

SOIL PROFILE/PERCOLATION TEST
DATA FORM

Property Location: **Tuluksak Wastewater Lagoon Site – Percolation/Storage Cell**

Test Pit Number and Location: Test Pit No. 2, N 61°05'31.7", W 160°57'12.2", excavated and monitoring tube set 10/20/2007

Elevations: Existing Ground 22.41'
Bottom/Top of Sand 15.95'
3/6/08 No water noted in test hole to Elev. 10.4' (12' below existing ground)

Soil Profile:

Depth (inches)	Soil Texture
0 – 12"	Organic Overburden (Pt), fibrous
12" – 82"	Organic silt (OL) and Silty Sand (SM) Mixture, dry
82" -	Poorly graded clean fine sand (SP)

No groundwater encountered

Time	Time Interval (Minutes)	End of Period Measurement (Feet)	Start of Period Measurement (Feet)	Drop in Water Level (Feet)	Percolation Rate (Hrs/Feet)	Remarks
6:55			6.05			Start soaking period.
7:10	0:15	6.30	5.76	0.25	1:00	Start percolation test. Water level 12" above bottom of hole.
7:25	0:15	5.85	5.85	0.15	1:40	
7:43	0:18	6.05	6.05	0.20	1:30	
7:58	0:15	6.18	5.95	0.13	1:55	
8:13	0:15	6.07	6.07	0.12	2:05	
8:28	0:15	6.20	6.10	0.13	1:55	
8:43	0:15	6.21	5.92	0.11	2:16	
8:58	0:15	6.06		0.14	1:47	End of Test.

Percolation rate = 10 minutes per inch

Date of test March 6, 2008 Percolation test by: **Lloyd Persson, P.E.**

PT-3

SOIL PROFILE/PERCOLATION TEST
DATA FORM

Property Location: **Tuluksak Wastewater Lagoon Site – Percolation/Storage Cell**

Test Pit Number and Location: Test Pit No. 3, N 61°05'32.2", W 160°57'14.7", excavated and monitoring tube set 10/20/2007

Elevations: Existing Ground 21.81'
Bottom/Top of Sand 14.95'
3/6/08 No water noted in test hole to Elev. 7'-8" (Excavated to 11' below existing ground and found no water.)

Soil Profile:

Depth (inches)	Soil Texture
0 – 12"	Organic Overburden (Pt), fibrous
12" – 64"	Organic silt (OL) and Silty Sand (SM) Mixture, dry
64" -	Poorly graded clean fine sand (SP)

No groundwater encountered

Time	Time Interval (Minutes)	End of Period Measurement (Feet)	Start of Period Measurement (Feet)	Drop in Water Level (Feet)	Percolation Rate (Hrs/Feet)	Remarks
7:01			6.65			Start soaking period.
7:16	0:15	7.65	6.65	1.00	0:15	Start percolation test. Water level 12" above bottom of hole.
7:31	0:15	7.70	6.50	1.05	0:14	
7:46	0:15	7.55	6.53	1.05	0:14	
8:01	0:15	7.52	6.62	0.94	0:15	
8:16	0:15	7.50	6.55	0.88	0:17	
8:31	0:15	7.42	6.60	0.82	0:17	
8:46	0:15	7.33	6.55	0.78	0:20	
9:01	0:15	7.36		0.81	0:18	End of Test.

Percolation rate = 1.5 minutes per inch

Date of test March 6, 2008 Percolation test by: **Lloyd Persson, P.E.**

** 6/10/08 Water Elev. measured above sand at 14.95' (seasonal high groundwater).

RECORD DRAWING CERTIFICATE
THESE DRAWINGS REFLECT RECORDED INFORMATION OBTAINED DURING CONSTRUCTION. INFORMATION PROVIDED HEREIN IS ACCURATE TO THE BEST OF MY KNOWLEDGE.
NAME DATE

SCALE:

2010-11 WASTEWATER SYSTEM IMPROVEMENTS
TEST HOLE BORING LOGS
TULUKSAK, ALASKA

CE2 ENGINEERS, INC.
PO BOX 230948 ANCHORAGE, AK 99523 PH: 907-349-9701 FAX: 907-349-9915

REVISION	BY	DATE

Project No. ____ Date JUNE 2009 Designed LAP Drawn GM Approved LAP

Sheet No. G3.9

G:\ACAD\TULUKSAK\TLT0901 2008 Waste water disposal area\G3.6 TO G3.10.dwg, 1/11/2011 1:05:42 PM, Plish, LANIER MP C2050, LD520C PCL 6BLK WHIT.pc3

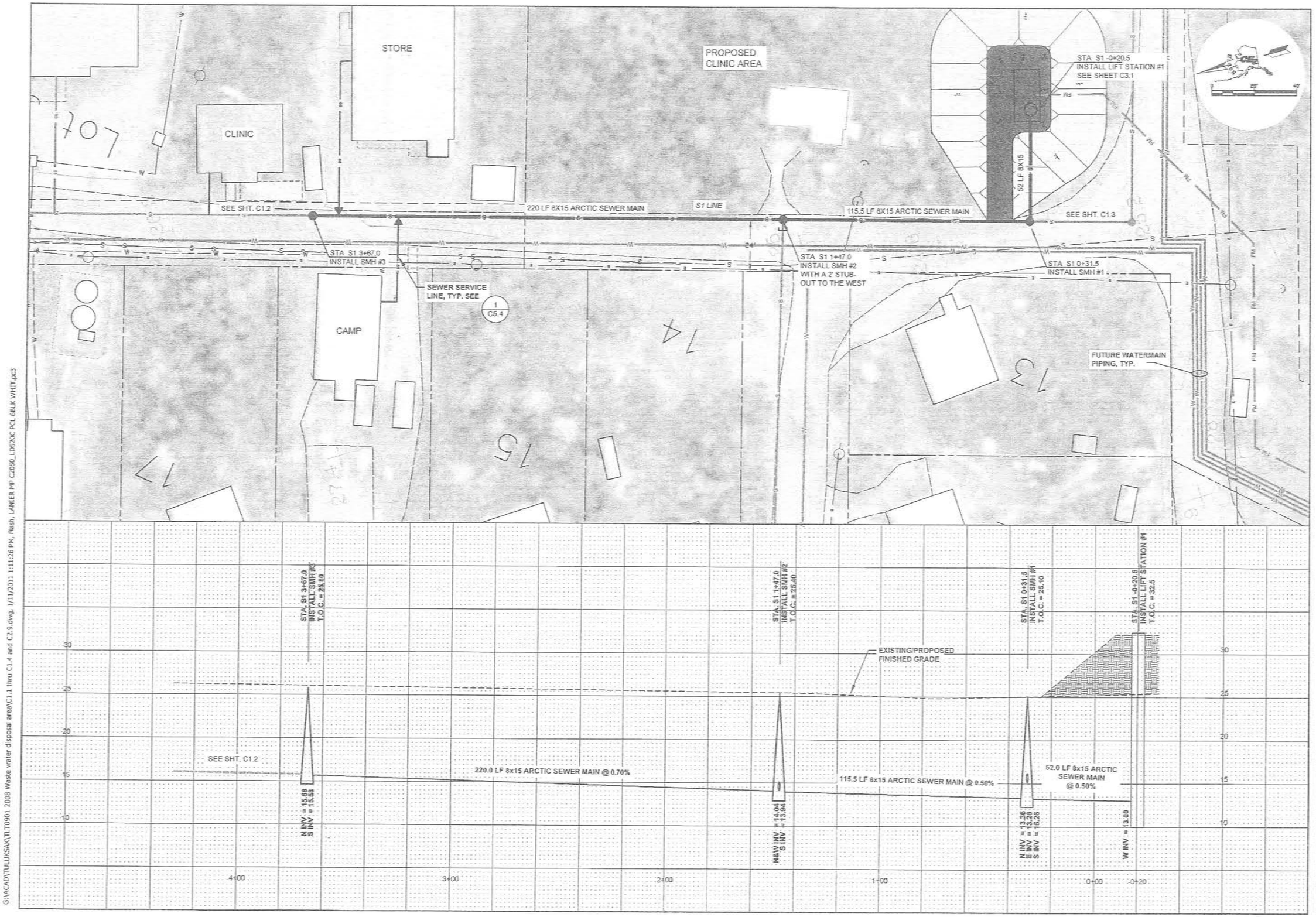

RECORD DRAWING CERTIFICATE

THESE DRAWINGS REFLECT RECORDED INFORMATION OBTAINED DURING CONSTRUCTION. INFORMATION PROVIDED HEREIN IS ACCURATE TO THE BEST OF MY KNOWLEDGE.

NAME _____ DATE _____

SCALE:
PLAN(1"=20')
PROF(H):1"=20'
PROF(V):1"=5'

2010-11 WASTEWATER SYSTEM IMPROVEMENTS

S1 GRAVITY SEWER PLAN AND PROFILE

TULUKSAK, ALASKA

CE2 ENGINEERS, INC.
PO BOX 220948 ANCHORAGE, AK 99503 PH: 907-349-1010 FAX: 907-349-1015

REVISION	BY	DATE

Project No. _____
Date JUNE 2009
Designed LAP
Drawn LAW
Approved LAP

Sheet No.
C1.1

G:\ACAD\TULUKSAK\TLT0901 2008 Waste water disposal area\C1.1 thru C1.4 and C2.9.dwg, 1/11/2011 1:11:26 PM, Flash, LANIER MP C2090_LD520C PCL 6BLK WHITE.pc3

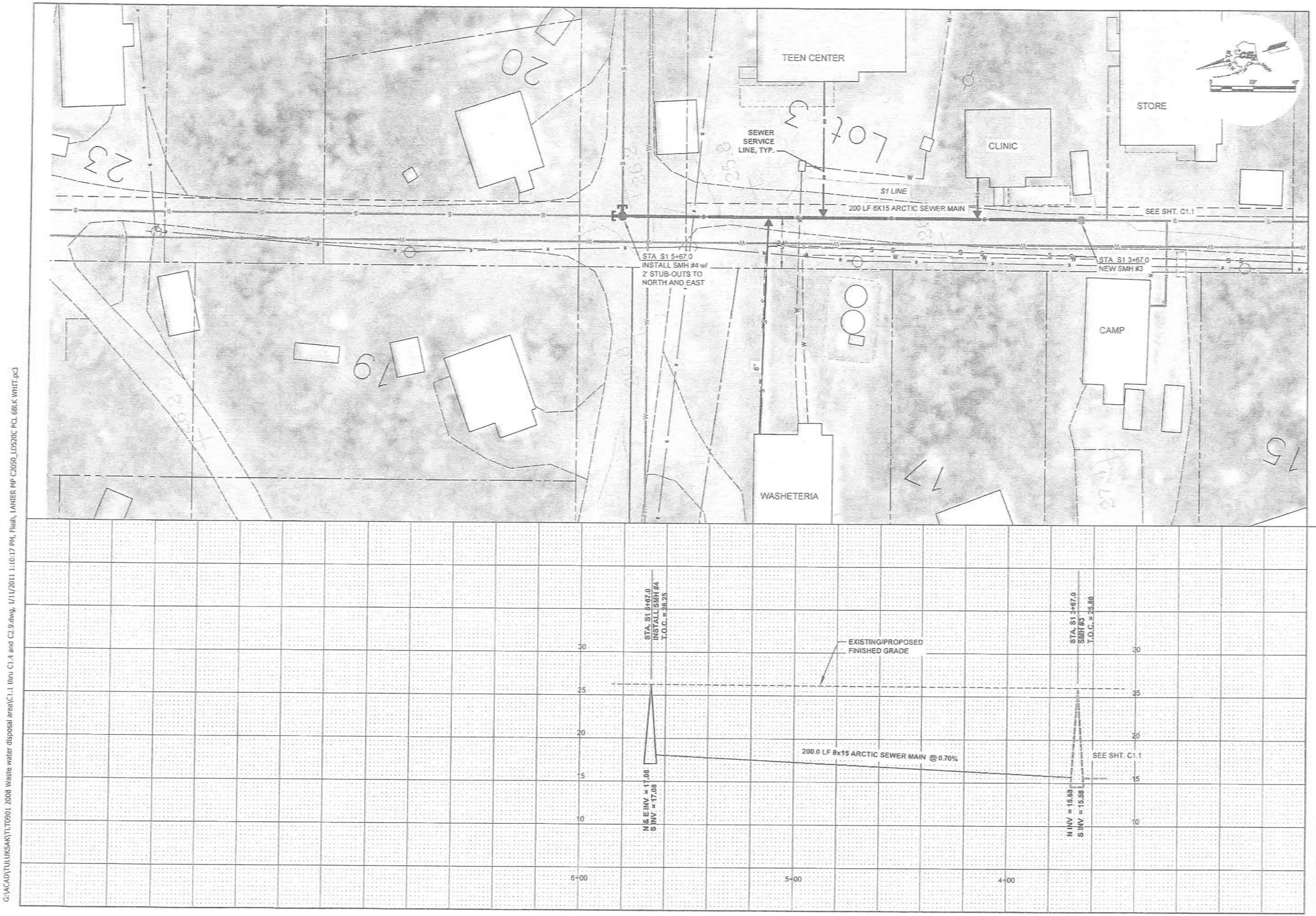

G:\ACAD\TULUKSAK\TLT0901 2008 Waste water disposal area\C1.1 thru C1.4 and C2.9.dwg, 1/11/2011 1:10:17 PM, Flash, LANIER MP C2050_LD520C PCL 6BLK WHIT.pc3

RECORD DRAWING CERTIFICATE

THESE DRAWINGS REFLECT RECORDED INFORMATION OBTAINED DURING CONSTRUCTION. INFORMATION PROVIDED HEREIN IS ACCURATE TO THE BEST OF MY KNOWLEDGE.

NAME _____ DATE _____

SCALE
PLAN(1"=20')
PROF(H)1"=20'
PROF(V)1"=5'

WHEN 24" BAR IS NOT 1" THEN SCALE PROPORTIONALLY

IF THIS LINE IS NOT 1" THEN ADJUST SCALES ACCORDINGLY

WILLAGE SAFE WATER ALASKA

STATE OF ALASKA 49TH LAWRENCE A. PHILLIPS 1/11/11 REGISTERED PROFESSIONAL ENGINEER

2010-11 WASTEWATER SYSTEM IMPROVEMENTS

S1 GRAVITY SEWER PLAN AND PROFILE

TULUKSAK, ALASKA

CE2 ENGINEERS, INC.
PO BOX 82249 ANCHORAGE, AK 99522 PH: 907-349-9010 FAX: 907-349-9015

REVISION	BY	DATE

Project No. _____
Date JUNE 2009
Designed LAP
Drawn LAN
Approved LAP

Sheet No.
C1.2

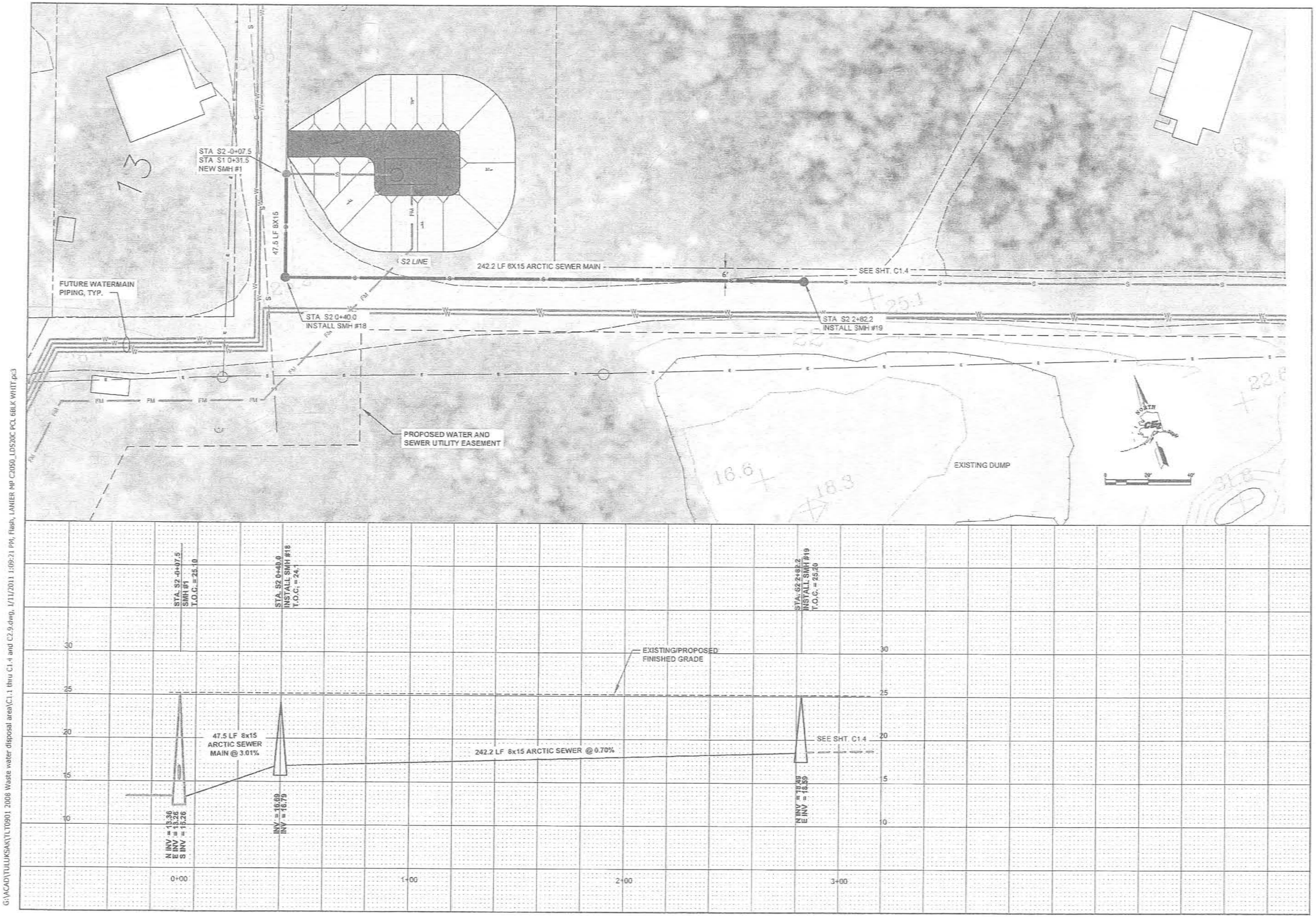

RECORD DRAWING CERTIFICATE

THESE DRAWINGS REFLECT RECORDED INFORMATION OBTAINED DURING CONSTRUCTION. INFORMATION PROVIDED HEREIN IS ACCURATE TO THE BEST OF MY KNOWLEDGE.

NAME DATE

SCALE:
PLAN:1"=20'
PROF(H):1"=20'
PROF(V):1"=5'

WHEN ONE INCH IS NOT ON THIS DRAWING

IF NOT ON THIS SHEET, THEN NOT ACCURATE AS SHOWN

2010-11 WASTEWATER SYSTEM IMPROVEMENTS

S2 GRAVITY SEWER PLAN AND PROFILE

TULUKSAK, ALASKA

CE2 ENGINEERS, INC.
PO BOX 223042 ANCHORAGE, AK 99503 PH: 907-349-1010 FAX: 907-349-1015

REVISION	BY	DATE

Project No. ____
Date JUNE 2009
Designed LAP
Drawn LAW
Approved LAP

Sheet No.
C1.3

G:\ACAD\TULUKSAK\TLT0901 2008 Waste water disposal area\C1.1 thru C1.4 and C2.9.dwg, 1/11/2011 1:09:21 PM, Flash, LANIER MP C2050_LD520C PCL 6BLK WHITE.pc3

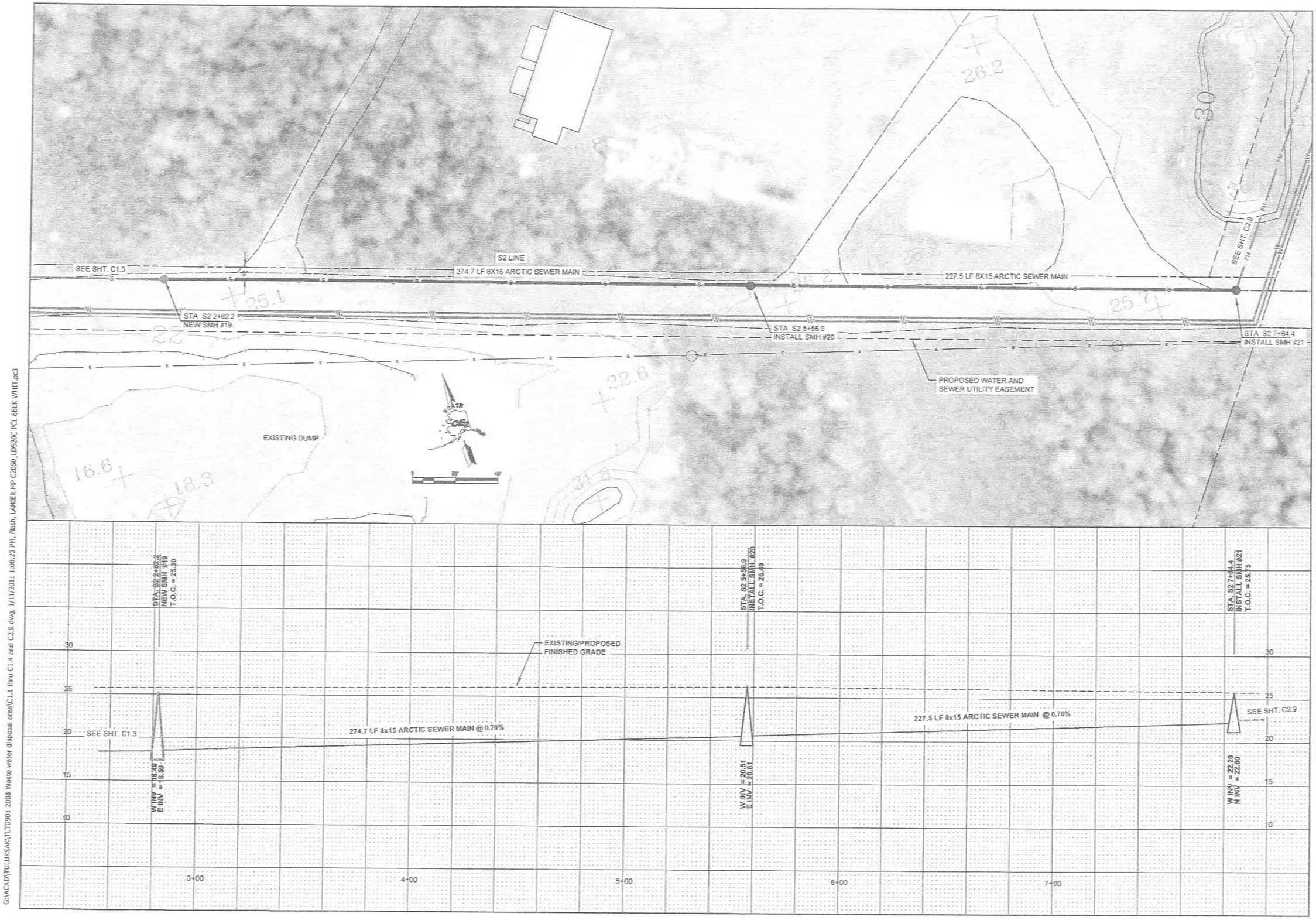

G:\ACAD\TULUKSAK\TLT0901 2008 Waste water disposal area\C1.1 thru C1.4 and C2.9.dwg, 1/11/2011 1:08:23 PM, Flash, LANIER MP C2050_LD520C PCL 68LK WHIT.pc3

RECORD DRAWING CERTIFICATE

THESE DRAWINGS REFLECT RECORDED INFORMATION OBTAINED DURING CONSTRUCTION. INFORMATION PROVIDED HEREIN IS ACCURATE TO THE BEST OF MY KNOWLEDGE.

NAME _____ DATE _____

SCALE:
PLAN (1"=20')
PROF (H)(1"=20')
PROF (V)(1"=5')

BAR IS ONE INCH ON ORIGINAL DRAWING

0 1"

IF NOT ONE INCH ON THIS SHEET, ADJUST SCALES ACCORDINGLY

ALASKA
ALLIANCE SAFE WATER

STATE OF ALASKA
49TH
LANDON A. PARKER
PE-LS 9022

2010-11 WASTEWATER SYSTEM IMPROVEMENTS

S2 GRAVITY SEWER
PLAN AND PROFILE

TULUKSAK, ALASKA

CE2 ENGINEERS, INC.
PO BOX 202046 ANCHORAGE, AK 99520 PH: 907-349-5310 FAX: 907-349-5315

REVISION	BY	DATE

Project No. _____
Date JUNE 2009
Designed LAP
Drawn LAW
Approved LAP

Sheet No.
C1.4

SEQUENCE OF CONSTRUCTION

1. CLEAR CUT ALL BRUSH AND TREES WITHIN THE PROPOSED UTILITY PIPING AREA, LAGOON AND BORROW PIT AREAS AS REQUIRED OR DIRECTED BY THE ENGINEER. LIMB ALL TREES WITH A TRUNK DIAMETER LARGER THAN 4 INCHES, CUT TRUNK INTO 6 FT LENGTHS AND STACK THE LENGTHS PERIODICALLY AT THE EDGE OF THE RIGHT OF WAY FOR HAUL OFF BY THOSE NEEDING FIREWOOD. DISPOSE OF REMAINING CLEAR CUT DEBRIS AT AN APPROVED LOCATION.
2. GRUB ALL AREAS BENEATH THE FOOTPRINT OF THE PROPOSED ACCESS ROAD CONSTRUCTION. IN ADDITION, GRUB THE BORROW SITE(S) AND AN ACCESS CORRIDOR BETWEEN THE BORROW SOURCE AND THE WORK AS DIRECTED BY THE ENGINEER. GRUBBING SHALL REMOVE ALL ORGANIC MATERIALS DOWN TO IN-SITU SANDY SOILS (AVERAGE ORGANIC DEPTH 1.5'). GRUBBING SHALL BE HAULED OFF TO AN APPROVED LOCATION. TOPSOIL SHALL BE STOCKPILED IN THE BORROW SITE OR ALONG THE EDGE OF THE RIGHT OF WAY FOR LATER USE IN RE-VEGETATION.
3. INSTALL LIFT STATION AND FORCEMAIN AS SHOWN ON THE PLANS. USE IN-SITU SANDS FOR TRENCH BACKFILL TO THE GREATEST EXTENT POSSIBLE.
4. OPEN THE BORROW PIT AS DIRECTED BY THE ENGINEER.
5. COVER THE FORCEMAIN WITH A MINIMUM OF 3 FEET OF TRENCH BACKFILL AND EMBANKMENT FILL BEFORE ALLOWING FULL DUMP TRUCKS TO HAUL OVER THE PIPELINE.

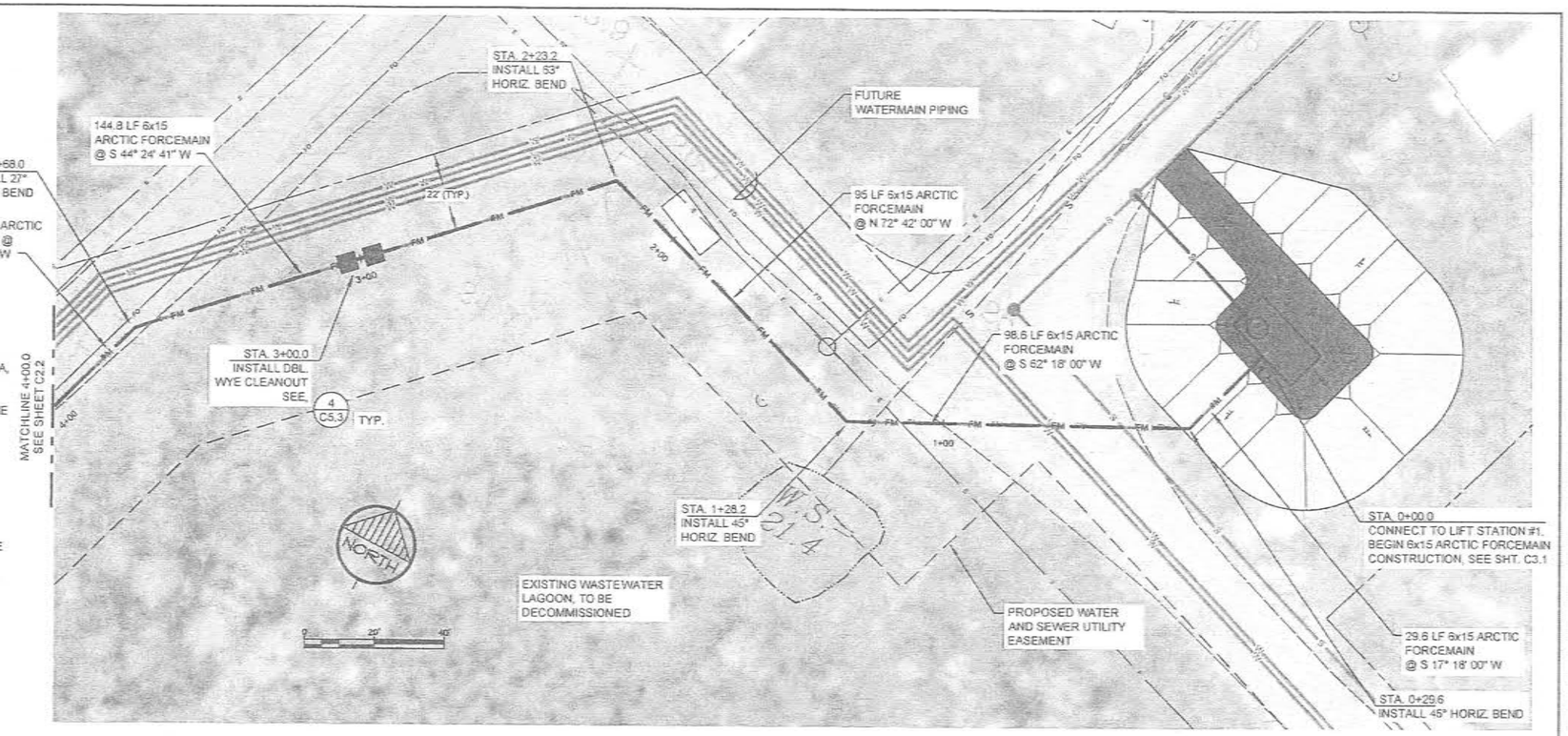

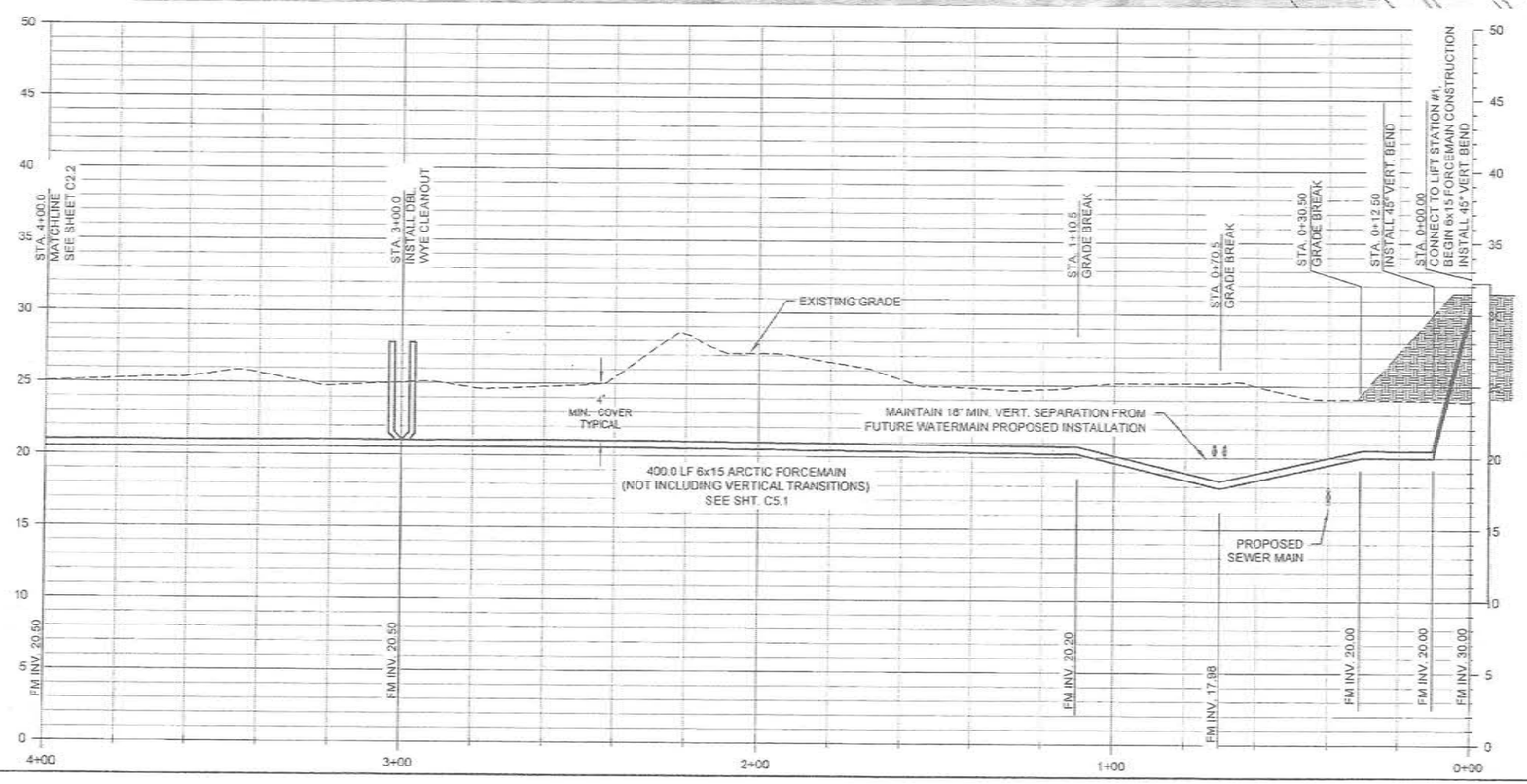

RECORD DRAWING CERTIFICATE

THESE DRAWINGS REFLECT RECORDED INFORMATION OBTAINED DURING CONSTRUCTION. INFORMATION PROVIDED HEREIN IS ACCURATE TO THE BEST OF MY KNOWLEDGE.

NAME _____ DATE _____

SCALE: AS SHOWN

WHEN DRAWING IS ORIGINAL DRAWING 0 1"

IF NOT ONE INCH ON THIS SHEET, ADJUST SCALES ACCORDINGLY

2010-11 WASTEWATER SYSTEM IMPROVEMENTS

FM1 FORCE MAIN PLAN AND PROFILE

TULUKSAK, ALASKA

CE2 ENGINEERS, INC.

PO BOX 230244 ANCHORAGE, AK 99523 PH: 907-349-1010 FAX: 907-349-1015

REVISION	BY	DATE
LAGOON RELOCATION	CM	8/10

Project No. _____

Date JUNE 2009

Designed LAP

Drawn CM

Approved LAP

Sheet No. C2.1

G:\ACAD\TULUKSAK\TLT0901 2008 Waste water disposal area\C2.1_C2.8 ROAD AND FORCEMAIN P&P.dwg, 1/11/2011 1:22:38 PM, Flash, LANER MP C2050 LD520C PCL 6BLK WHITE.pc3

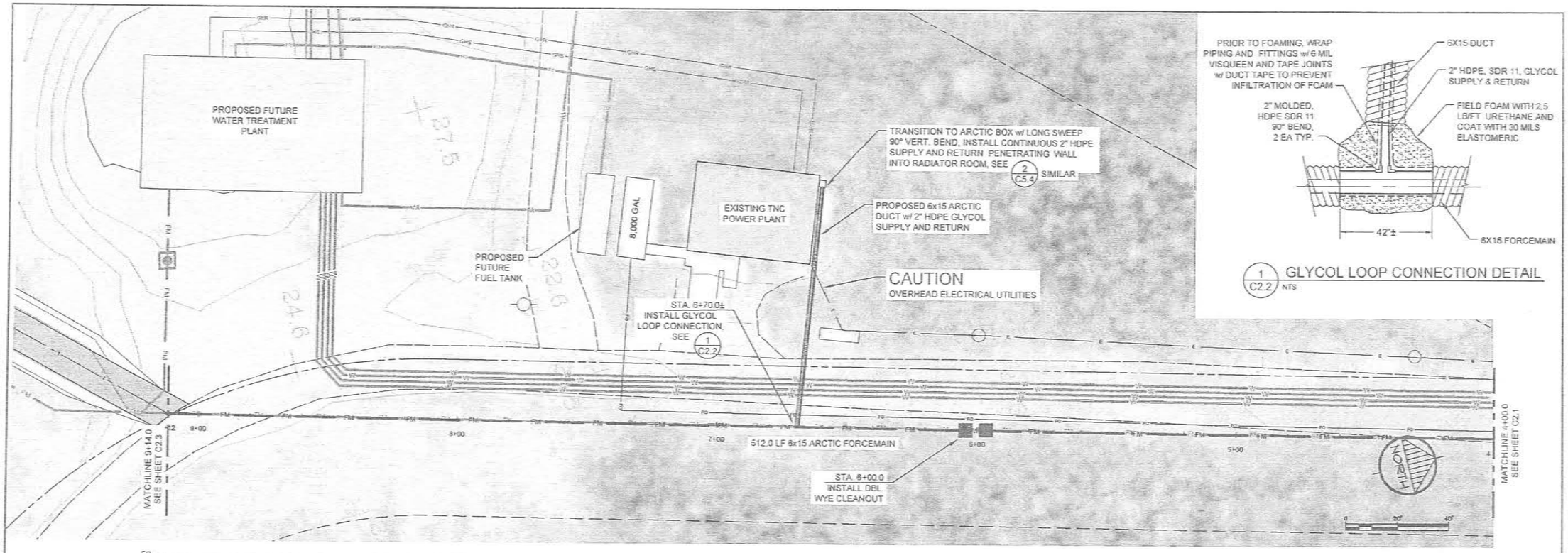

G:\ACAD\TULUKSAK\TLT0901 2008 Waste water disposal area\C2.1_C2.8 ROAD AND FORCEMAIN P&P.dwg, 1/11/2011 1:12:56 PM, Flash, LANIER MP C2050_LD520C PCL 6BLK WHIT.pc3

RECORD DRAWING CERTIFICATE

THESE DRAWINGS REFLECT RECORDED INFORMATION OBTAINED DURING CONSTRUCTION. INFORMATION PROVIDED HEREIN IS ACCURATE TO THE BEST OF MY KNOWLEDGE

NAME _____ DATE _____

SCALE: AS SHOWN

WHEN THIS BORDER MEASURES 1" THIS DRAWING IS FULL SCALE

IF NOT THIS BORDER THIS DRAWING IS NOT FULL SCALE

VILLAGE SAFE WATER ALASKA

STATE OF ALASKA 49TH PROFESSIONAL ENGINEER

2010-11 WASTEWATER SYSTEM IMPROVEMENTS

FM1 FORCE MAIN PLAN AND PROFILE

TULUKSAK, ALASKA

CE2 ENGINEERS, INC.

PO BOX 202846 ANCHORAGE, AK 99520 PH: 907-349-1019 FAX: 907-349-1015

REVISION	BY	DATE
LAGOON RELOCATION	CM	8/10

Project No. _____

Date JUNE 2009

Designed LAP

Drawn CM

Approved LAP

Sheet No.

C2.2

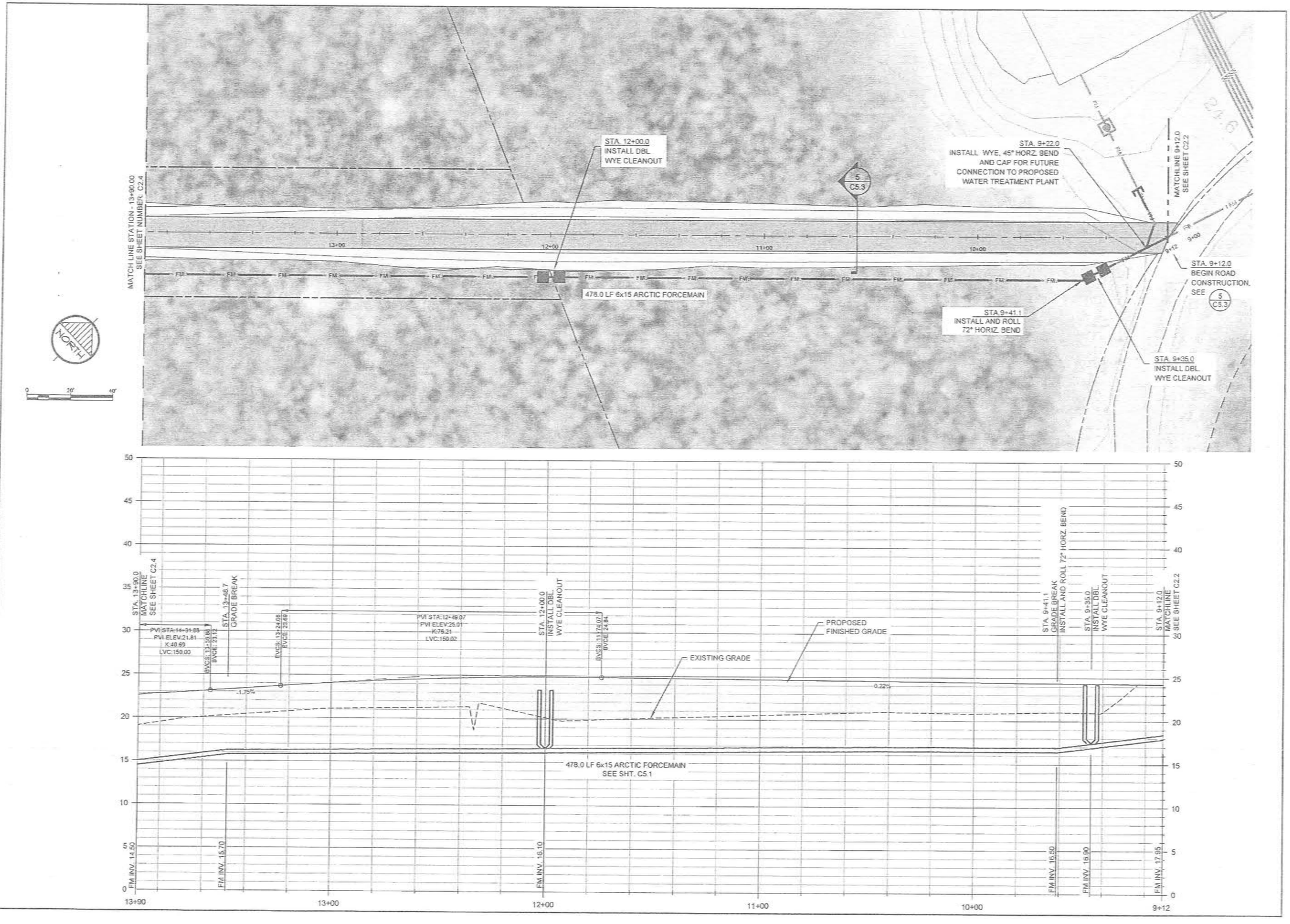

G:\ACAD\TULUKSAK\TL0901 2008 Waste water disposal area\C2.1_C2.8 ROAD AND FORCEMAIN P&P.dwg, 1/11/2011 1:14:14 PM, Flash, LANIER HP C2050_LD520C PCL 6BLK WHIT.pc3

RECORD DRAWING CERTIFICATE

THESE DRAWINGS REFLECT RECORDED INFORMATION OBTAINED DURING CONSTRUCTION. INFORMATION PROVIDED HEREIN IS ACCURATE TO THE BEST OF MY KNOWLEDGE.

NAME _____ DATE _____

SCALE: AS SHOWN

2010-11 WASTEWATER SYSTEM IMPROVEMENTS

ROAD AND
FM1 FORCE MAIN
PLAN AND PROFILE

TULUKSAK, ALASKA

CE2 ENGINEERS, INC.
PO BOX 223948 ANCHORAGE, AK 99522 PH: 907-349-1010 FAX: 907-349-1015

REVISION	BY	DATE
LAGOON RELOCATION	CM	8/10

Project No. _____
Date JUNE 2009
Designed LAP
Drawn CM
Approved LAP

Sheet No.
C2.3

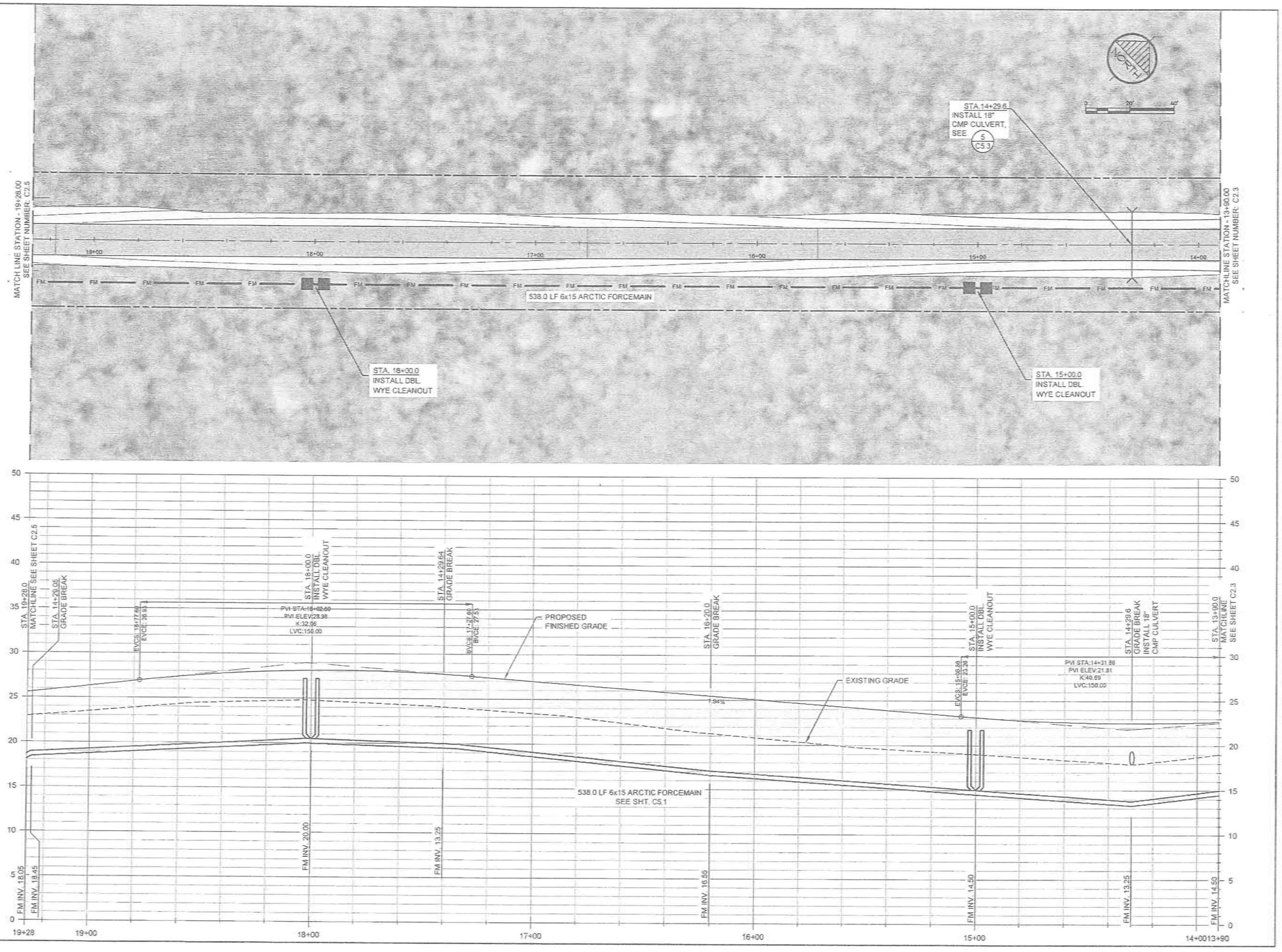

G:\ACAD\TULUKSAK\TLT0901 2008 Waste water disposal area\C2.1_C2.8 ROAD AND FORCEMAIN P&P.dwg, 1/11/2011 1:15:33 PM, Flash, LANIER MP C2050_LD520C PCL 68LK WHIT.pc3

RECORD DRAWING CERTIFICATE

THESE DRAWINGS REFLECT RECORDED INFORMATION OBTAINED DURING CONSTRUCTION. INFORMATION PROVIDED HEREIN IS ACCURATE TO THE BEST OF MY KNOWLEDGE.

NAME _____ DATE _____

SCALE: AS SHOWN

2010-11 WASTEWATER SYSTEM IMPROVEMENTS

ROAD AND
FM1 FORCE MAIN
PLAN AND PROFILE

TULUKSAK, ALASKA

CE2 ENGINEERS, INC.

PO BOX 102048 ANCHORAGE, AK 99510 PH: 907-349-9118 FAX: 907-349-9116

REVISION	BY	DATE
LAGOON RELOCATION	CM	8/10

Project No. _____
Date JUNE 2009
Designed LAP
Drawn CM
Approved LAP

Sheet No.
C2.4

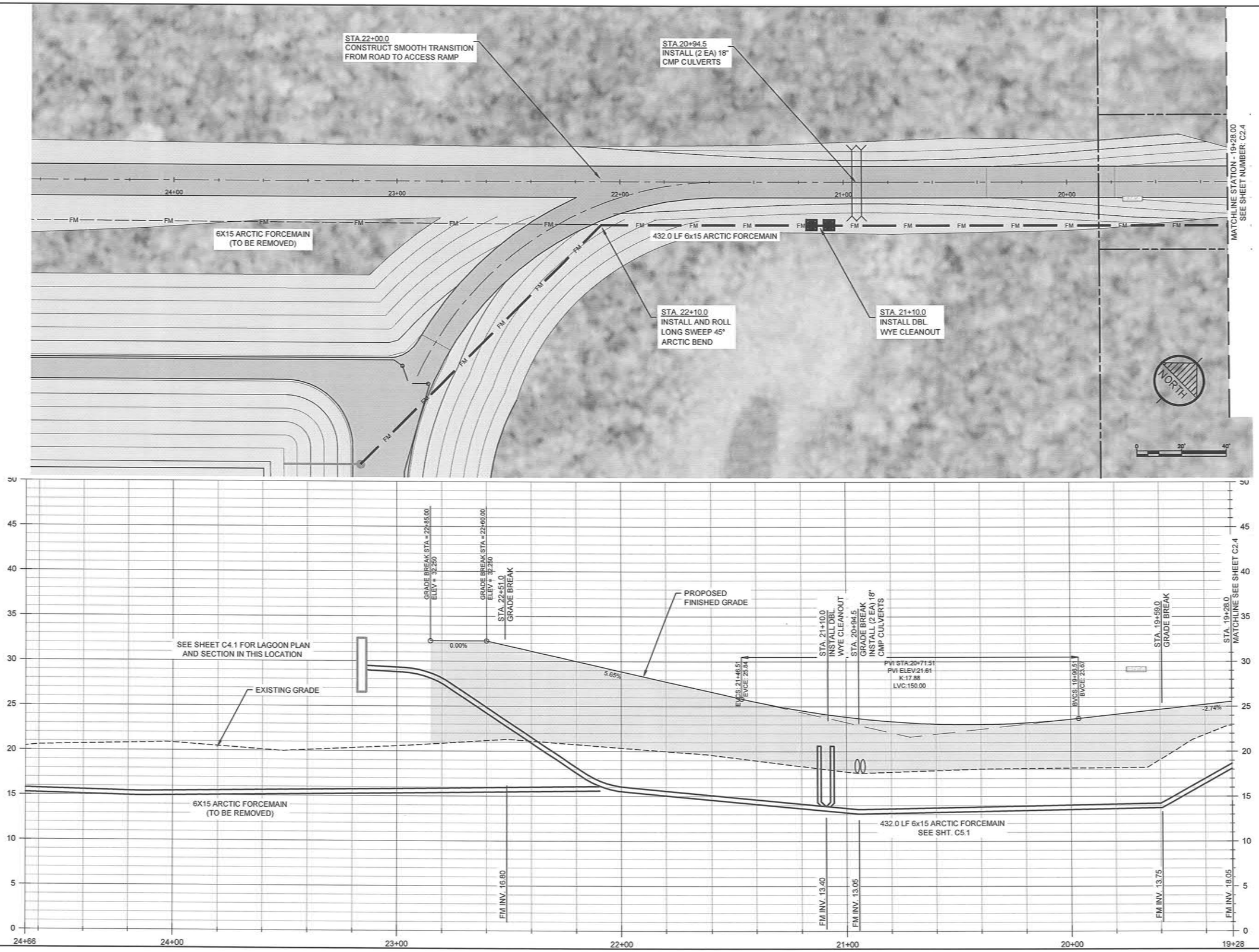

RECORD DRAWING CERTIFICATE

THESE DRAWINGS REFLECT RECORDED INFORMATION OBTAINED DURING CONSTRUCTION. INFORMATION PROVIDED HEREIN IS ACCURATE TO THE BEST OF MY KNOWLEDGE.

NAME _____ DATE _____

SCALE: AS SHOWN

BAR IS ONE INCH ON ORIGINAL DRAWING. 0 1"

IF NOT ONE INCH ON THIS SHEET, ADJUST SCALES ACCORDINGLY

WILL SAVE SAFE WATER ALASKA

STATE OF ALASKA 49TH REGISTERED PROFESSIONAL ENGINEER Michael R. Erdman No.8202

5/7/14

2010-11 WASTEWATER SYSTEM IMPROVEMENTS

ROAD AND FM1 FORCE MAIN PLAN AND PROFILE

TULUKSAK, ALASKA

CE2 ENGINEERS, INC.

PO BOX 223948 ANCHORAGE, AK 99523 PH: 907-349-1010 FAX: 907-349-1015

REVISION	BY	DATE
LAGOON RELOCATION	CM	8/10
LAGOON RELOCATION	CM	4/14

Project No. _____

Date APRIL 2014

Designed MRE

Drawn CM

Approved MRE

Sheet No.

C2.5

G:\ACAD\TULUKSAK\TLT0901 2008 Waste water disposal area\IFC Rev Apr 2014\C2.1_C2.8 ROAD AND FORCEMAIN P&P.dwg, 5/6/2014 5:54:09 PM, cmerz, \\Ce2main\LANIER MP C2050/LD520C PCL 6

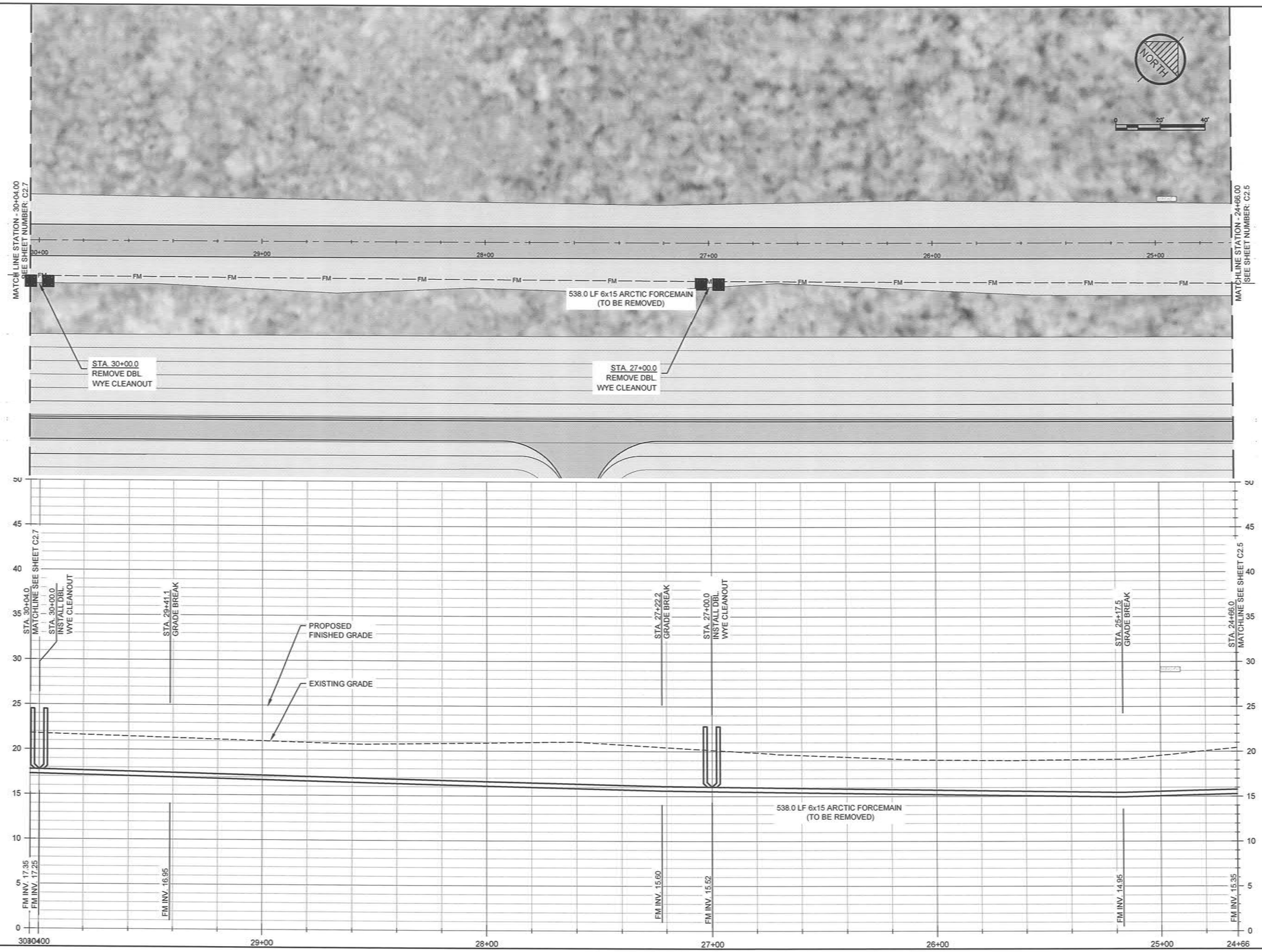

RECORD DRAWING CERTIFICATE

THESE DRAWINGS REFLECT RECORDED INFORMATION OBTAINED DURING CONSTRUCTION. INFORMATION PROVIDED HEREIN IS ACCURATE TO THE BEST OF MY KNOWLEDGE.

NAME _____ DATE _____

SCALE: AS SHOWN

BAR IS ONE INCH ON ORIGINAL DRAWING

IF NOT ONE INCH ON THIS SHEET, ADJUST SCALE ACCORDINGLY

WILL SERVE SAFE WATER ALASKA

STATE OF ALASKA 49TH Michael R. Eshman No.6822 REGISTERED PROFESSIONAL ENGINEER

5/7/14

2010-11 WASTEWATER SYSTEM IMPROVEMENTS

ROAD AND
FM1 FORCE MAIN
PLAN AND PROFILE

TULUKSAK, ALASKA

CE2 ENGINEERS, INC.
PO BOX 223948 ANCHORAGE, AK 99523 PH: 907-349-1010 FAX: 907-349-1015

REVISION	BY	DATE
LAGOON RELOCATION	CM	8/10
LAGOON RELOCATION	CM	4/14

Project No. _____
Date APRIL 2014
Designed MRE
Drawn CM
Approved MRE

Sheet No.
C2.6

G:\ACAD\TULUKSAK\TLT0901 2008 Waste water disposal area\IFC Rev Apr 2014\C2.1_C2.8 ROAD AND FORCEMAIN P&P.dwg, 5/6/2014 6:01:27 PM, cmerz, \\Ce2main\LANIER MP C2050/LD520C PCL 6

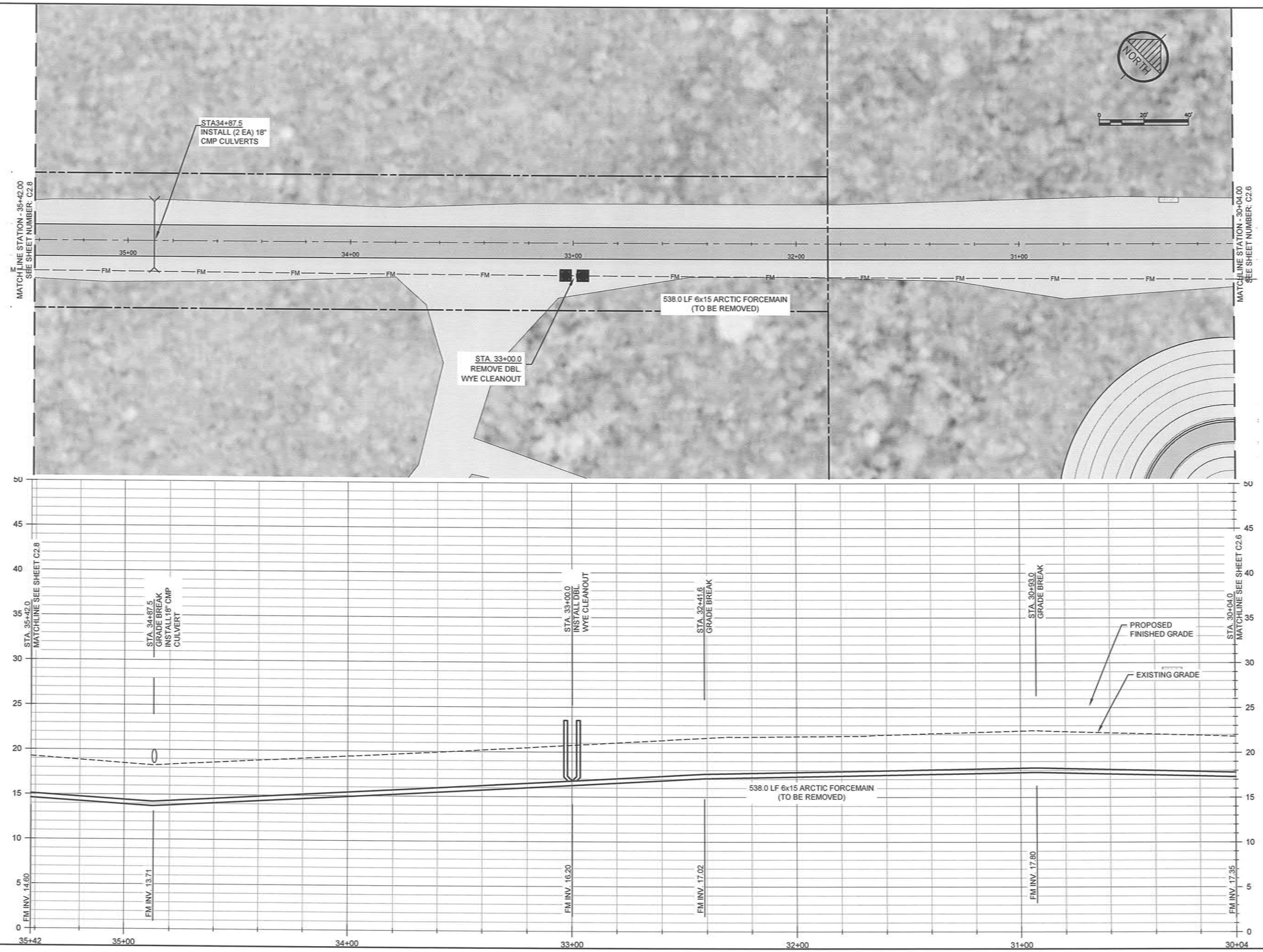

RECORD DRAWING CERTIFICATE

THESE DRAWINGS REFLECT RECORDED INFORMATION OBTAINED DURING CONSTRUCTION. INFORMATION PROVIDED HEREIN IS ACCURATE TO THE BEST OF MY KNOWLEDGE.

NAME _____ DATE _____

SCALE: AS SHOWN

BAR IS ONE INCH ON ORIGINAL DRAWING

IF NOT ONE INCH ON THIS SHEET, ADJUST SCALE ACCORDINGLY

5/7/14

STATE OF ALASKA
49TH
Michael R. Erdman
No.6262
REGISTERED PROFESSIONAL ENGINEER

2010-11 WASTEWATER SYSTEM IMPROVEMENTS

ROAD AND
FM1 FORCE MAIN
PLAN AND PROFILE

TULUKSAK, ALASKA

CE2 ENGINEERS, INC.
PO BOX 230948 ANCHORAGE, AK 99523 PH: 907-349-1010 FAX: 907-349-1015

REVISION	BY	DATE
LAGOON RELOCATION	CM	8/10
LAGOON RELOCATION	CM	4/14

Project No. _____
Date APRIL 2014
Designed MRE
Drawn MRE
Approved LAP

Sheet No.
C2.7

G:\ACAD\TULUKSAK\TLT0901 2008 Waste water disposal area\IFC Rev Apr 2014\C2.1_C2.8 ROAD AND FORCEMAIN P&P.dwg, 5/6/2014 6:02:23 PM, cmerz, \\Ce2main\LANIER MP C2050/LD520C PCL 6

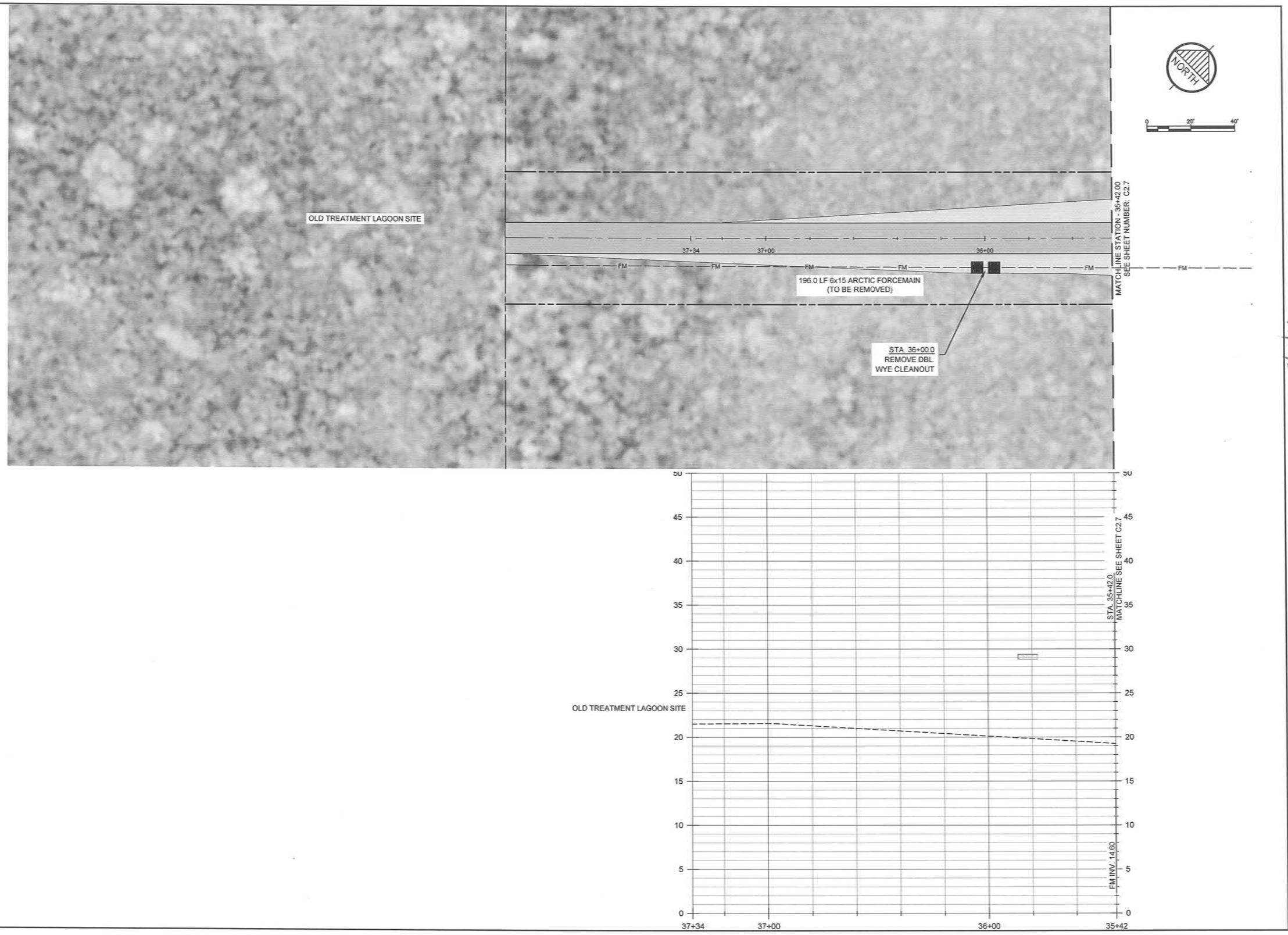

RECORD DRAWING CERTIFICATE

THESE DRAWINGS REFLECT RECORDED INFORMATION OBTAINED DURING CONSTRUCTION. INFORMATION PROVIDED HEREIN IS ACCURATE TO THE BEST OF MY KNOWLEDGE.

NAME _____ DATE _____

SCALE: AS SHOWN

BAR IS ONE INCH ON ORIGINAL DRAWING

IF NOT ONE INCH ON THIS SHEET, ADJUST SCALE ACCORDINGLY

SULLIVAN SAFE WATER ALASKA

STATE OF ALASKA
49TH
Mark R. Erickson
No. 8282
REGISTERED PROFESSIONAL ENGINEER

5/7/14

2010-11 WASTEWATER SYSTEM IMPROVEMENTS

ROAD AND FM1 FORCE MAIN PLAN AND PROFILE

TULUKSAK, ALASKA

CE2 ENGINEERS, INC.
PO BOX 223546 ANCHORAGE, AK 99523 PH: 907-349-1010 FAX: 907-349-1015

REVISION	BY	DATE
LAGOON RELOCATION	CM	8/10
LAGOON RELOCATION	CM	4/14

Project No. _____
Date APRIL 2014
Designed MRE
Drawn CM
Approved MRE

Sheet No.
C2.8

G:\ACAD\TULUKSAK\TLT0901 2008 Waste water disposal area\IFC Rev Apr 2014\C2.1_C2.8 ROAD AND FORCEMAIN P&P.dwg, 5/6/2014 6:05:13 PM, cmerz, \\Ce2main\LANIER MP C2050/LD520C PCL 6

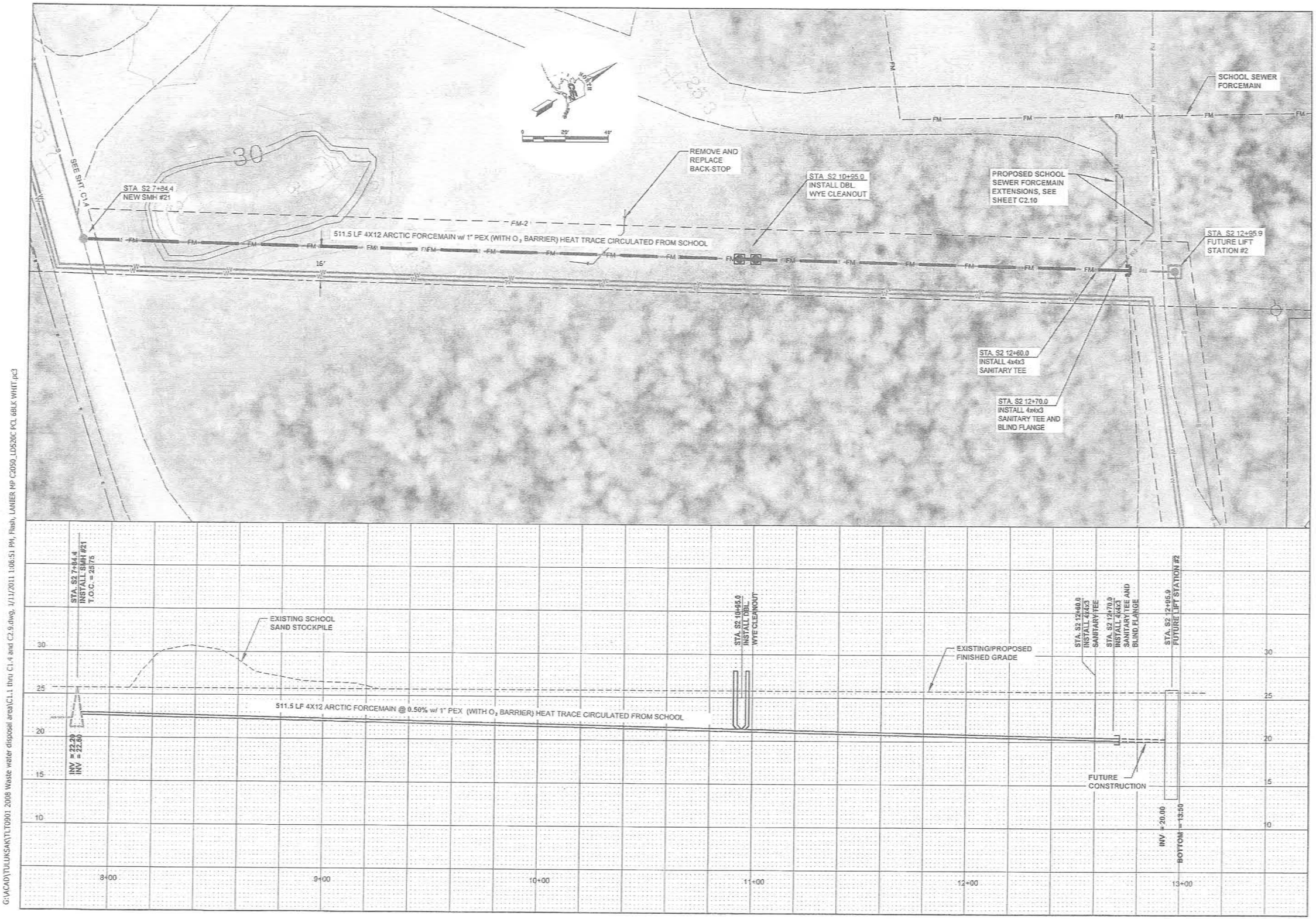

RECORD DRAWING CERTIFICATE

THESE DRAWINGS REFLECT RECORDED INFORMATION OBTAINED DURING CONSTRUCTION. INFORMATION PROVIDED HEREIN IS ACCURATE TO THE BEST OF MY KNOWLEDGE.

NAME _____ DATE _____

SCALE:
PLAN:1"=20'
PROF(H):1"=20'
PROF(V):1"=5'

2010-11 WASTEWATER SYSTEM IMPROVEMENTS

FM2 FORCEMAIN PLAN AND PROFILE

TULUKSAK, ALASKA

CE2 ENGINEERS, INC.
PO BOX 210946 ANCHORAGE, AK 99521 PH: 907-349-1019 FAX: 907-349-1015

REVISION	BY	DATE
LAGOON RELOCATION	CM	8/10

Project No. _____
Date JUNE 2009
Designed LAP
Drawn LAW
Approved LAP

Sheet No.
C2.9

G:\ACAD\TULUKSAK\TLT0901 2008 Waste water disposal area\C1.1 thru C1.4 and C2.9.dwg, 1/11/2011 1:06:51 PM, Flash, LANIER MP C2050_LD520C PCL 6BLK WHIT.pc3

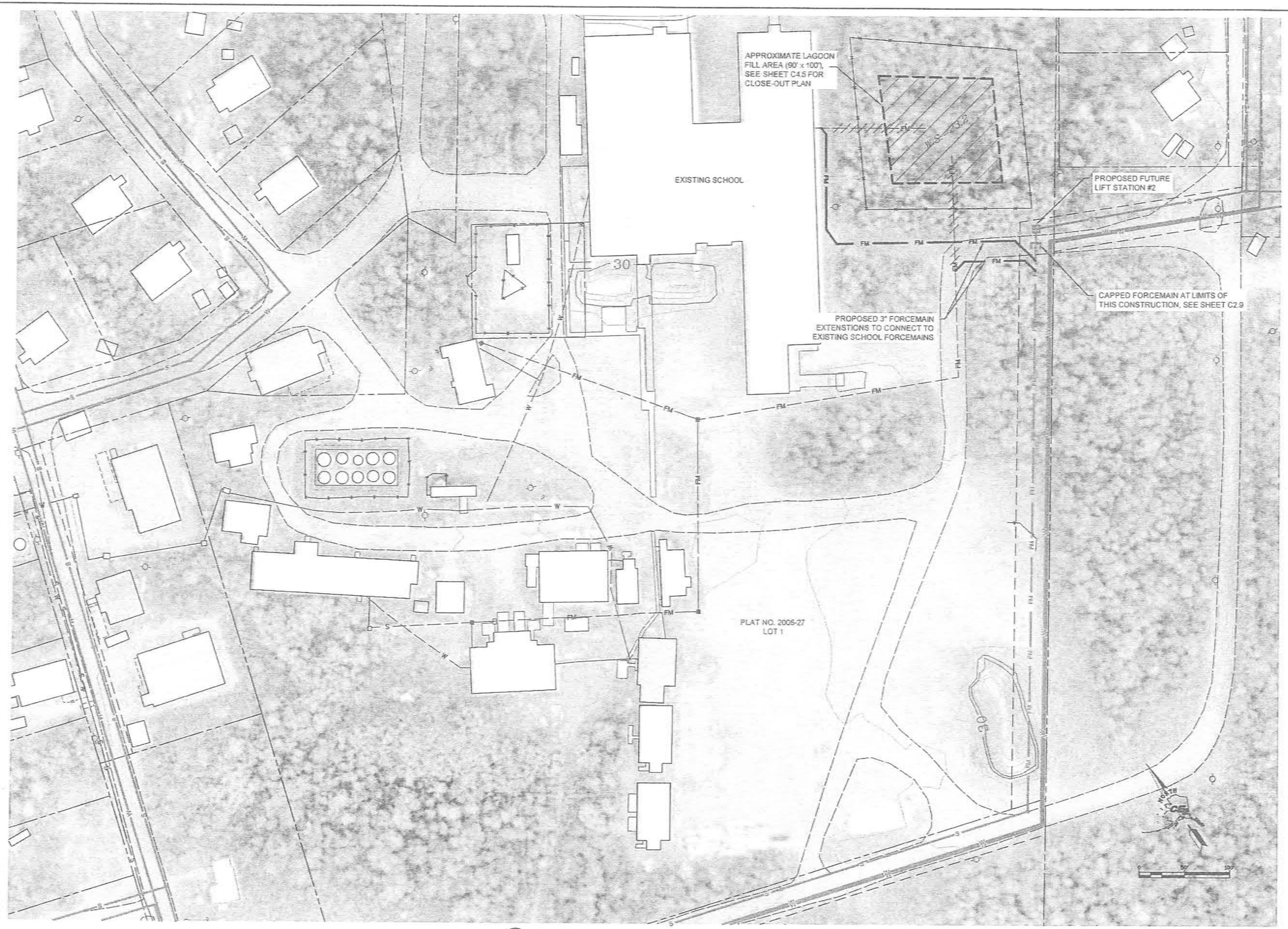

1 C2.10 CONNECTION TO SCHOOL UTILITIES

G:\ACAD\TULUKSAK\TL0901 2008 Waste water disposal area\C2.10 SCHOOL UTILITIES.dwg, 1/11/2011 1:27:13 PM, Flash, LANIER MP C2050, LD520C PCL 6BLK WHIT.pc3

RECORD DRAWING CERTIFICATE

THESE DRAWINGS REFLECT RECORDED INFORMATION OBTAINED DURING CONSTRUCTION. INFORMATION PROVIDED HEREIN IS ACCURATE TO THE BEST OF MY KNOWLEDGE.

NAME _____ DATE _____

SCALE: AS SHOWN

2010-11 WASTEWATER SYSTEM IMPROVEMENTS

CONNECTION TO SCHOOL UTILITIES

TULUKSAK, ALASKA

CE2 ENGINEERS, INC.
PO BOX 230948 ANCHORAGE, AK 99523 PH: 907-349-1015 FAX: 907-349-1015

REVISION	BY	DATE

Project No. _____
Date SEPT 2010
Designed LAP
Drawn CM
Approved LAP

Sheet No. C2.10

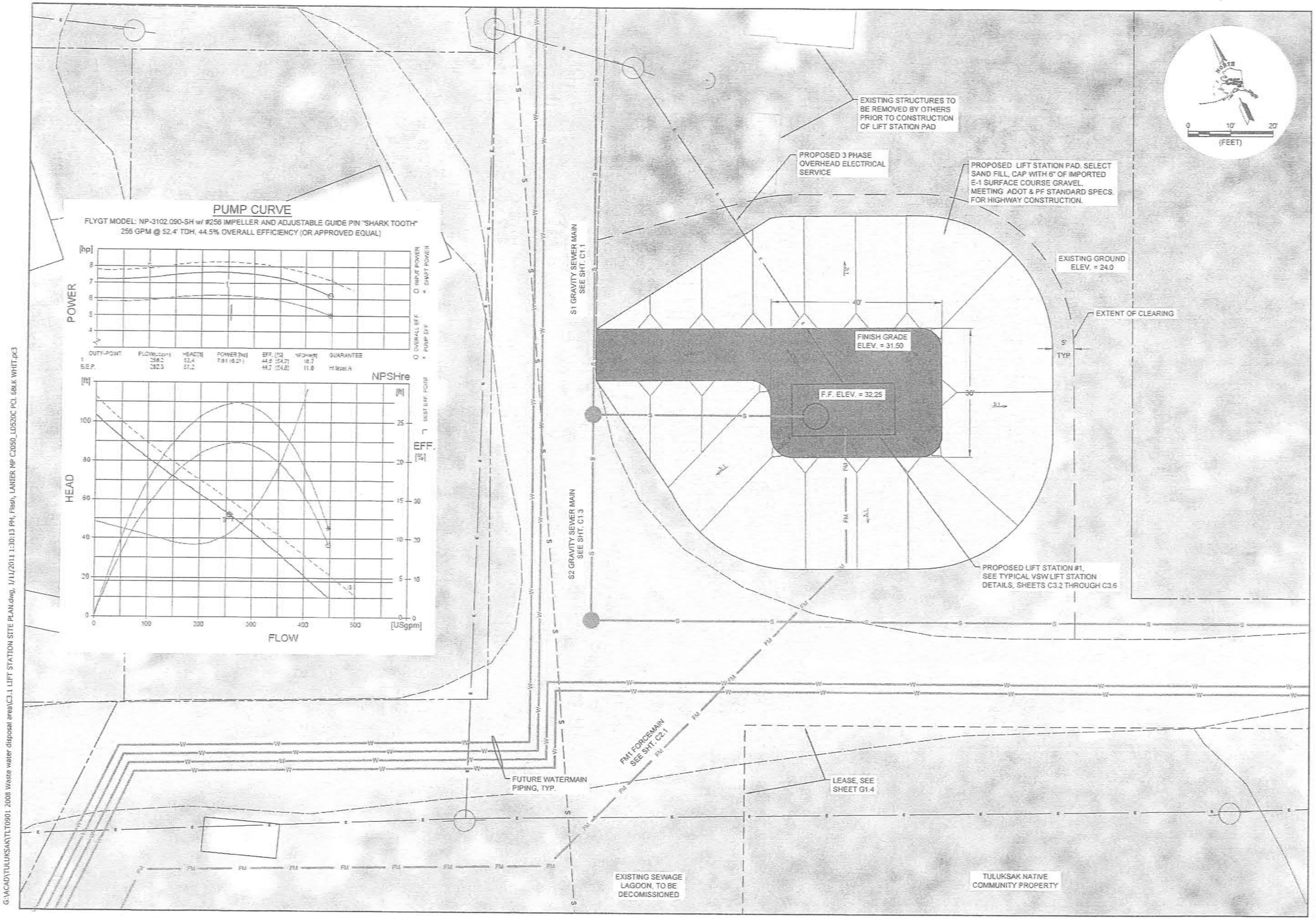

G:\ACAD\TULUKSAK\TLT0901 2008 Waste water disposal area\C3.1 LIFT STATION SITE PLAN.dwg, 1/11/2011 1:30:13 PM, Fitsly, LANIER MP C2050_LD520C PCL 6BLK WHIT.pc3

RECORD DRAWING CERTIFICATE

THESE DRAWINGS REFLECT RECORDED INFORMATION OBTAINED DURING CONSTRUCTION. INFORMATION PROVIDED HEREIN IS ACCURATE TO THE BEST OF MY KNOWLEDGE.

NAME _____ DATE _____

SCALE: AS SHOWN

2010-11 W/WW SYSTEM IMPROVEMENTS

LIFT STATION #1
SITE PLAN AND
PUMP CURVE

TULUKSAK, ALASKA

CE2 ENGINEERS, INC.
PO BOX 92294 ANCHORAGE, AK 99509 PH: 907-349-1010 FAX: 907-349-1015

REVISION	BY	DATE

Project No. _____
Date JUNE 2009
Designed JPK
Drawn GM
Approved LAP

Sheet No.
C3.1

GENERAL CONSTRUCTION NOTES:

1. INSTALL 6 MIL VISQUEEN UNDER SLAB.

FOUNDATION CONSTRUCTION NOTES:

1. INSTALL BOARD STOCK INSULATION TO 18" BELOW TOP OF SLAB. BOARD STOCK CAN BE USED AS FORM MATERIAL WITH PROPER SUPPORT.
2. NFS SAND FILL TO 12" BELOW BOTTOM OF SLAB. COMPACT SUB GRADE PRIOR TO PLACEMENT. GRAVEL PLACED IN 6" LIFTS.
3. THE WET WELL WILL BE A PRE-CAST MANHOLE A SPECIFIED IN THE DRAWINGS.
4. CAST-IN-PLACE CONCRETE MUST HAVE A MINIMUM COMPRESSIVE STRENGTH OF 3000 PSI AT 28 DAYS. EACH YARD OF CONCRETE MUST CONTAIN NOT LESS THAN 5-1/2 SACKS OF CEMENT AND NOT MORE THAN 6.5 GALLONS OF WATER PER SACK OF CEMENT.
5. DEFORMED REINFORCING STEEL MUST CONFORM TO ASTM SPECIFICATION A615 AND HAVE A MINIMUM YIELD STRENGTH OF 60,000 PSI. LAP BARS MUST BE A MINIMUM OF 30 DIAMETERS. REINFORCING STEEL LAYOUT AND PLACING WILL CONFORM TO THE STANDARD BUILDING CODE REQUIREMENTS FOR REINFORCED CONCRETE (ACI 318-83).
6. WELDED WIRE FABRIC FOR ENTRY SLAB WILL CONFORM TO ASTM A185. LAPS TO BE ONE CROSSWISE SPACING PLUS 1-1/2".
7. CONCRETE COVER FOR THE REINFORCING STEEL MUST BE 3 INCHES FOR THE FOOTINGS AND TWO INCHES FOR THE WALLS AND SLAB.
8. METAL ROOFING WILL CONSIST OF 1-1/2" TWIN RIB ALUMINUM.
9. THE SEALS ON THE PRE-CAST MANHOLE SECTIONS WILL BE RAMNEK.
10. THE INTERIOR OF THE LIFT STATION WET WELL, INCLUDING METAL PIPING, WILL BE PAINTED WITH 46H-413 HI-BUILD TNEMEC TAR, 13 DRY FILM MILLS.
11. THE LIFT STATION WILL BE FILLED AND PRESSURE TESTED FOR LEAKS BEFORE ANY EFFLUENT ENTERS THE STATION.
12. ALL CONSTRUCTION SHALL BE DONE IN A SAFE, WORKMANLIKE MANNER TO INDUSTRY STANDARDS AND IN CONFORMANCE WITH APPLICABLE LOCAL, STATE AND FEDERAL CODES AND REGULATIONS.
13. HANGERS AND ANCHORS USED FOR SUPPORTING HORIZONTAL PIPING SHALL BE OF MATERIAL OF SUFFICIENT STRENGTH AND ADEQUATELY ANCHORED TO MAINTAIN EACH SUPPORT'S PROPORTIONAL SHARE OF THE WEIGHT OF THE PIPE AND CONTENTS.
14. SUPPORTS FOR HORIZONTAL IRON PIPE SHALL BE PROVIDED AT INTERVALS OF NOT MORE THAN 10 FEET OR AS SHOWN ON THE PLANS. SUPPORTS SHALL BE ADEQUATE TO PREVENT STRESS AT JOINTS DUE TO SAGGING. SUPPORTS SHALL BE PROVIDED AT EACH HORIZONTAL BRANCH CONNECTION. SUSPENDED LINES SHALL BE SUITABLY BRACED TO PREVENT HORIZONTAL MOVEMENT.

SEWAGE LIFT STATION ELECTRICAL CODE REVIEW

1999 NFPA 820 STANDARD FOR FIRE PROTECTION IN WASTEWATER TREATMENT AND COLLECTION FACILITIES CHAPTER 2 TABLE 2-2 OUTLINES THE REQUIREMENTS AND AREA CLASSIFICATIONS FOR THE INSTALLATION CONFIGURATIONS TYPICALLY USED. THIS INSTALLATION IS AN ABOVE GRADE WASTEWATER PUMPING STATION WHERE THE CONTROL ROOM IS PHYSICALLY SEPARATED WITH NO PERSONNEL ACCESS TO THE WET WELL. THE REQUIREMENTS CAN BE FOUND IN TABLE 2-2.

THE TABLE STATES THE FOLLOWING FOR THE CONTROL ROOM (TABLE 2.2 ITEM 18):
FIRE AND EXPLOSION HAZARD: NOT APPLICABLE
VENTILATION: NOT REQUIRED
EXTENT OF CLASSIFIED AREA: NOT APPLICABLE
NEC-AREA ELECTRICAL CLASSIFICATION: UNCLASSIFIED

THE TABLE STATES THE FOLLOWING FOR THE WET WELL SIDE (TABLE 2.2 ITEM 19):
FIRE AND EXPLOSION HAZARD: POSSIBLE IGNITION OF FLAMMABLE GASES
VENTILATION: NONE (CLASS 1, DIV. 1); 12 AIR CHANGES OR MORE (CLASS 1, DIV. 2)
EXTENT OF CLASSIFIED AREA: ENTIRE SPACE OR ROOM
NEC-AREA ELECTRICAL CLASSIFICATION: DIVISION 1 OR 2 DEPENDING ON VENTILATION

THE INSTALLATION WILL ALLOW THE USE OF UNCLASSIFIED EQUIPMENT AND WIRING METHODS IN THE CONTROL ROOM. HOWEVER, THE SENSING TRANSDUCER MUST HAVE THE RACEWAY SEALED AT THE BOUNDARY INTO THE CLASS 1, DIVISION 1 WET WELL.

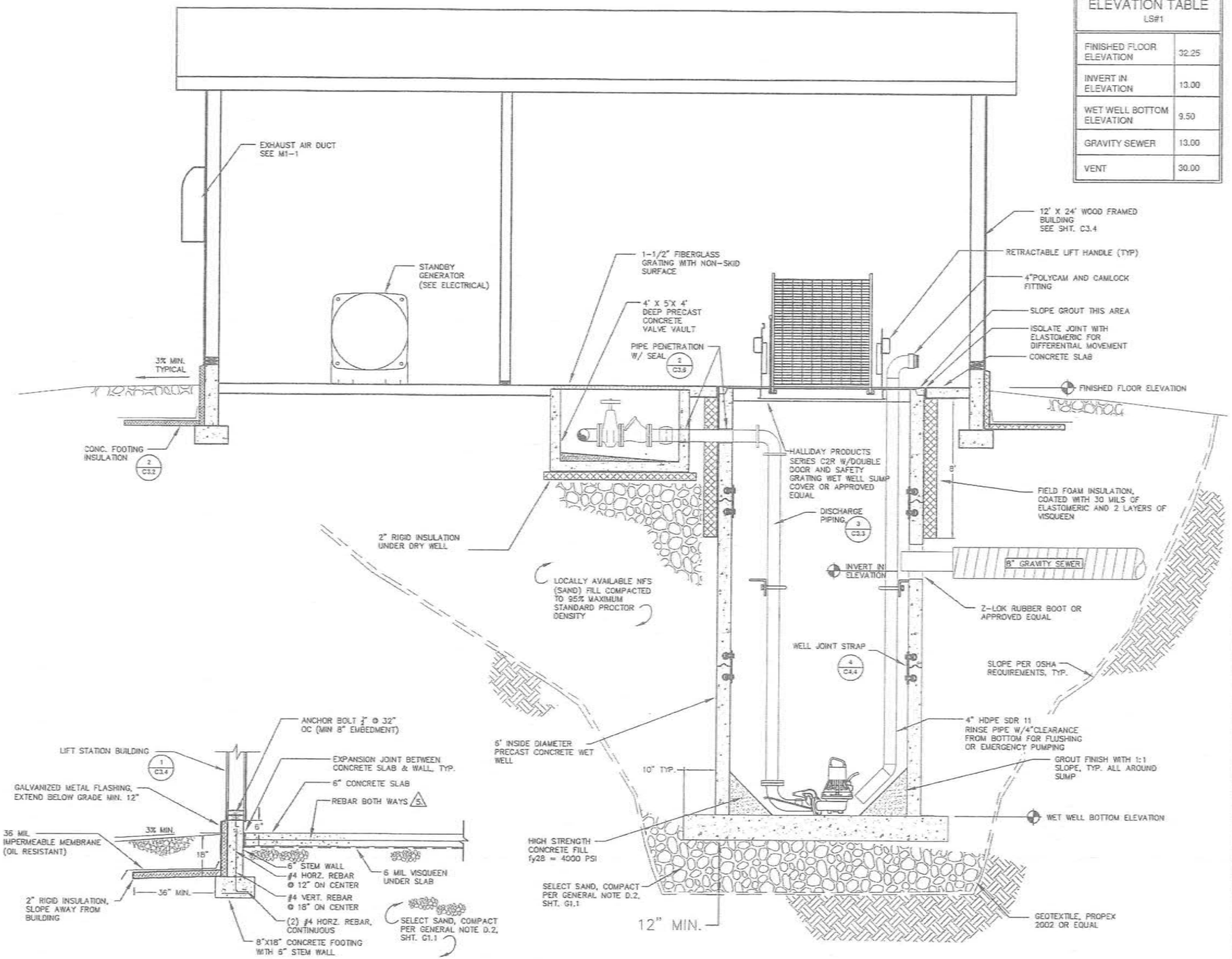

3 / C3.2 WET WELL FOUNDATION DETAIL
NTS

2 / C3.2 TYPICAL WALL CONNECT/SLAB DETAIL
NTS

ELEVATION TABLE LS#1	
FINISHED FLOOR ELEVATION	32.25
INVERT IN ELEVATION	13.00
WET WELL BOTTOM ELEVATION	9.50
GRAVITY SEWER	13.00
VENT	30.00

RECORD DRAWING CERTIFICATE
THESE DRAWINGS REFLECT RECORDED INFORMATION OBTAINED DURING CONSTRUCTION. INFORMATION PROVIDED HEREIN IS ACCURATE TO THE BEST OF MY KNOWLEDGE.
NAME DATE

SCALE:
WHEN PLOTTED ON 24x36 ORIGINAL DRAWING
IF NOT ONE INCH ON THIS SHEET, ADJUST SCALE ACCORDINGLY

2010-11 WASTEWATER SYSTEM IMPROVEMENTS
LIFT STATION DETAILS
TULUKSAK, ALASKA

CES ENGINEERS, INC.
PO BOX 220846 ANCHORAGE, AK 99523 PH: 907-349-1015 FAX: 907-349-1015

REVISION	BY	DATE

Project No. ____
Date JUNE 2009
Designed LAP
Drawn VSW
Approved LAP

Sheet No. C3.2

G:\ACAD\TULUKSAK\TLT0901 2008 Waste water disposal area\C3.2_THRU_3.6 revised format.dwg, 1/11/2011 12:57:46 PM, cmerz, LANIER MP C2050_LDS20C PCL 6.pc3

SEE ELECTRICAL SHEETS FOR WIRING DETAILS

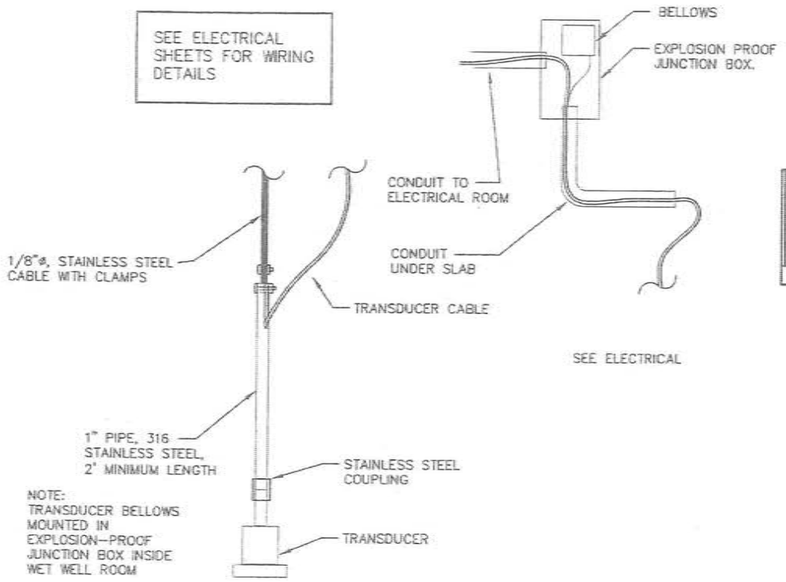

NOTE:
TRANSDUCER BELLOWS MOUNTED IN EXPLOSION-PROOF JUNCTION BOX INSIDE WET WELL ROOM

2 / C3.3 TRANSDUCER DETAIL
NTS

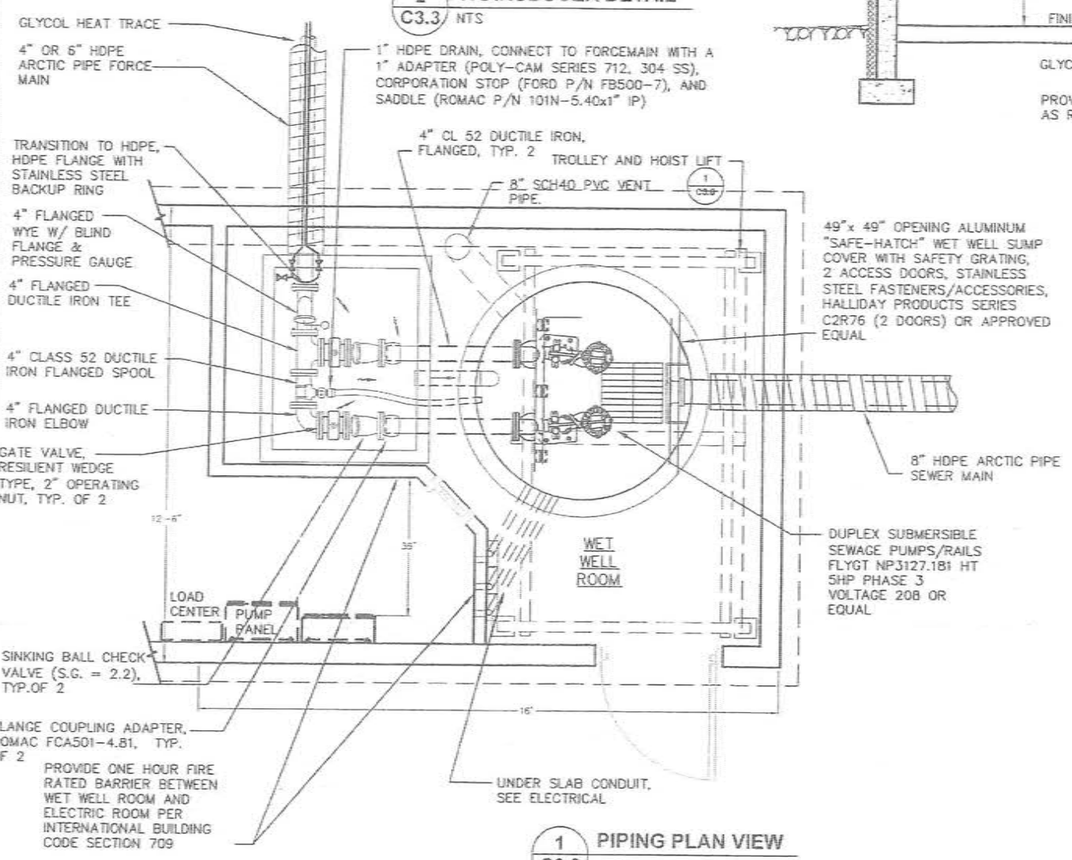

1 / C3.3 PIPING PLAN VIEW
NTS

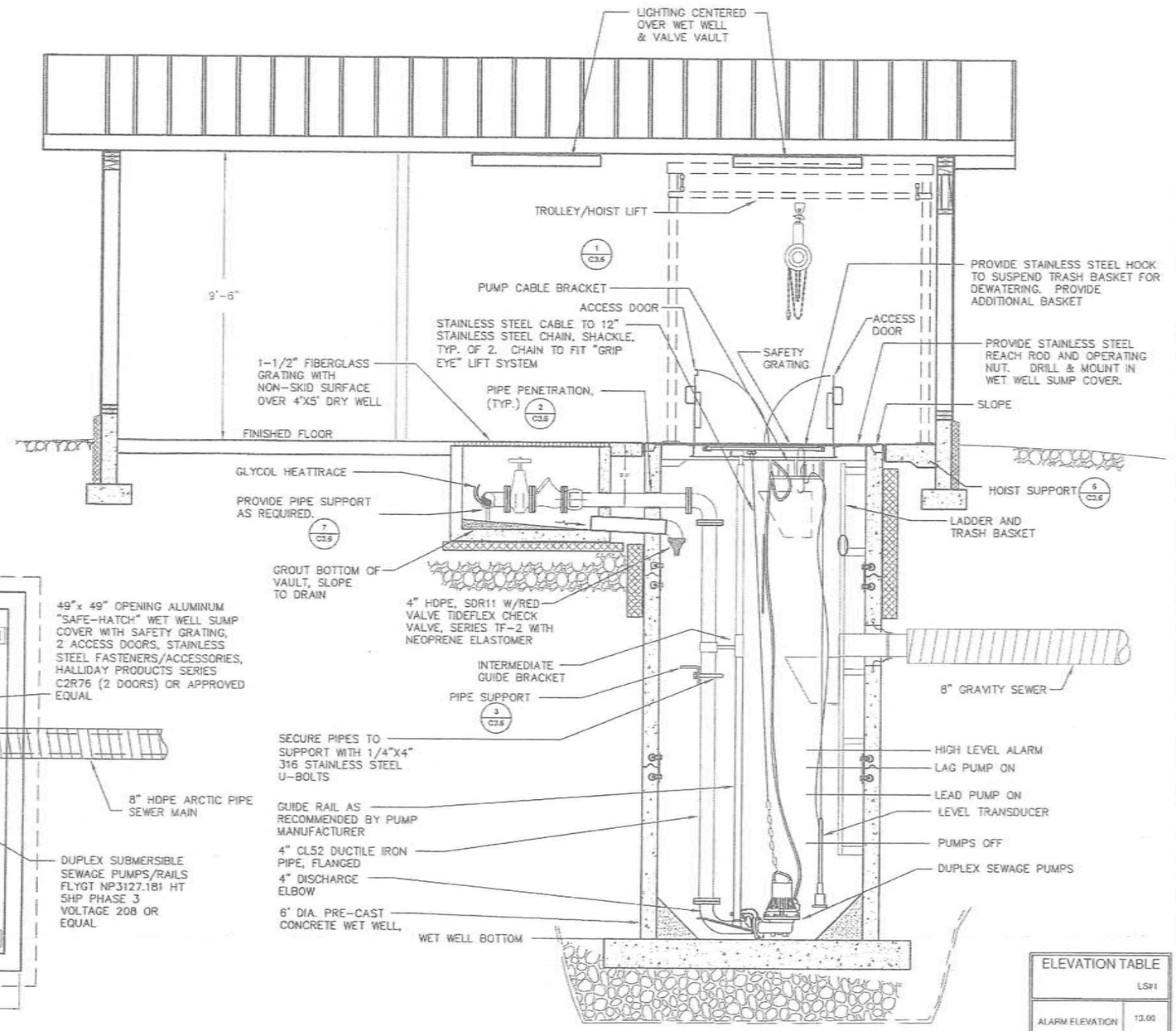

NOTE: ATTACH 1/8" DIA. SS CABLE TO THE ATTACHED PUMP CHAIN TO FACILITATE LIFTING PUMPS FOR REMOVAL/REPLACEMENT OR MAINTENANCE.

3 / C3.3 PIPING PROFILE VIEW
NTS

ELEVATION TABLE	LS#1
ALARM ELEVATION	13.00
LAG PUMP ON ELEVATION	12.75
LEAD PUMP ON ELEVATION	12.50
PUMPS OFF ELEVATION	11.50

RECORD DRAWING CERTIFICATE
THESE DRAWINGS REFLECT RECORDED INFORMATION OBTAINED DURING CONSTRUCTION. INFORMATION PROVIDED HEREIN IS ACCURATE TO THE BEST OF MY KNOWLEDGE.
NAME _____ DATE _____

SCALE:
SHEETS DIM HEIGHT ORIGINAL DRAWING
IF NOT CAN BE SEEN ON THIS SHEET, ADJUST WITH PROPORTIONAL

VILLAGE SAFE WATER ALASKA

STATE OF ALASKA 40 YRS PROFESSIONAL ENGINEER

2010-11 WASTEWATER SYSTEM IMPROVEMENTS
LIFT STATION PIPING PLAN AND DETAILS
TULUKSAK, ALASKA

CE2 ENGINEERS, INC.
PO BOX 220669 ANCHORAGE, AK 99522 PH: 907.349.1019 FAX: 907.349.1015

REVISION	BY	DATE

Project No. _____ Date JUNE 2009
Designed LAP
Drawn VBW
Approved LAP

Sheet No. C3.3

G:\ACAD\TULUKSAK\TL0901 2008 Waste water disposal area\C3.2_THRU_3.6 revised format.dwg, 1/11/2011 1:00:13 PM, cmerz, LANIER MP C2050_LD520C PCL 6.pc3

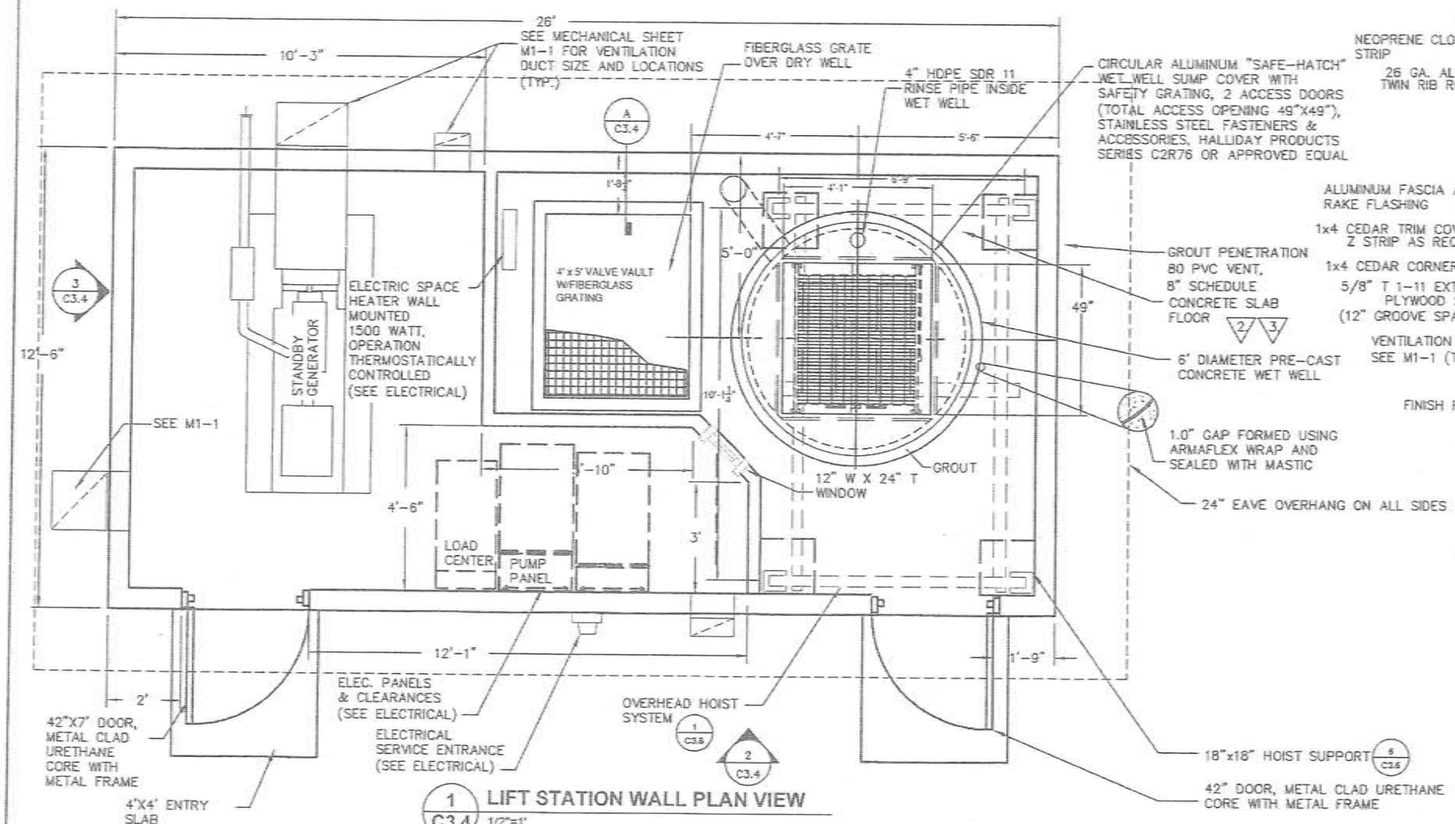

1 C3.4 LIFT STATION WALL PLAN VIEW 1/2"=1'

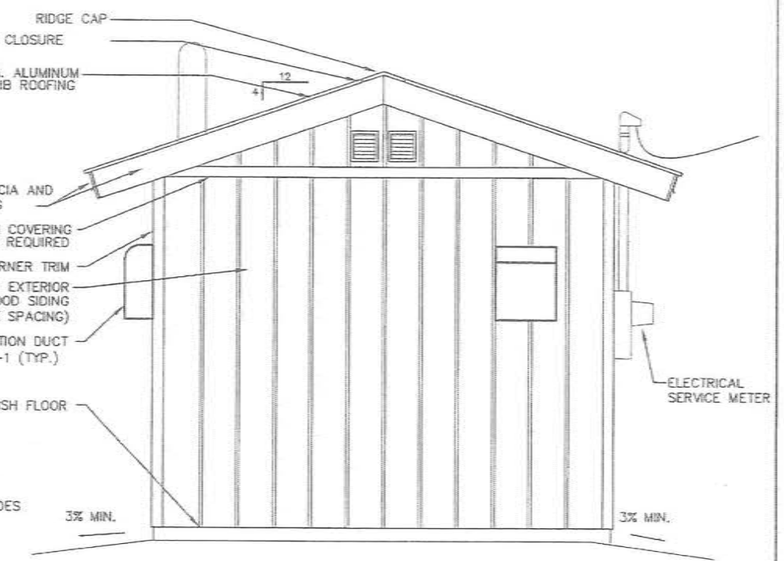

3 C3.4 SIDE ELEVATION 1/2"=1'

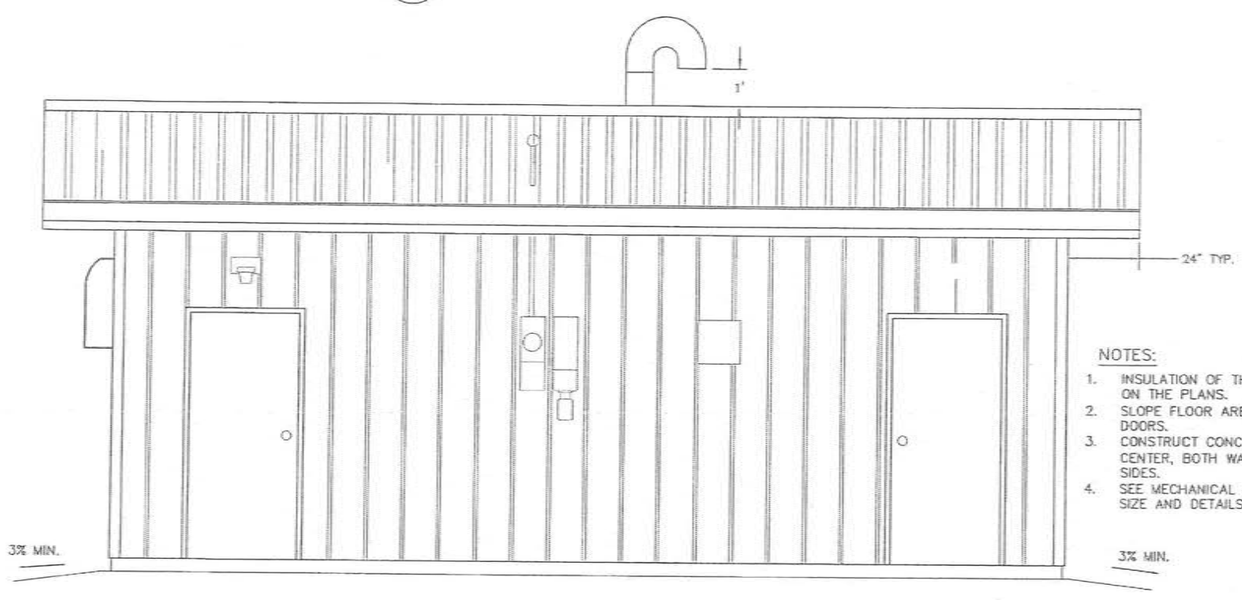

2 C3.4 FRONT ELEVATION 1/2"=1'

NOTES:

1. INSULATION OF THIS BUILDING IS REQUIRED AS SHOWN ON THE PLANS.
2. SLOPE FLOOR AREAS TO DRAIN TOWARD PUMP ACCESS DOORS.
3. CONSTRUCT CONCRETE SLAB W/ 1/2" REBAR @ 12" ON CENTER, BOTH WAYS. ALLOW FOR 2" COVER ON ALL SIDES.
4. SEE MECHANICAL SHEET M1-1 FOR VENTILATION DUCT SIZE AND DETAILS

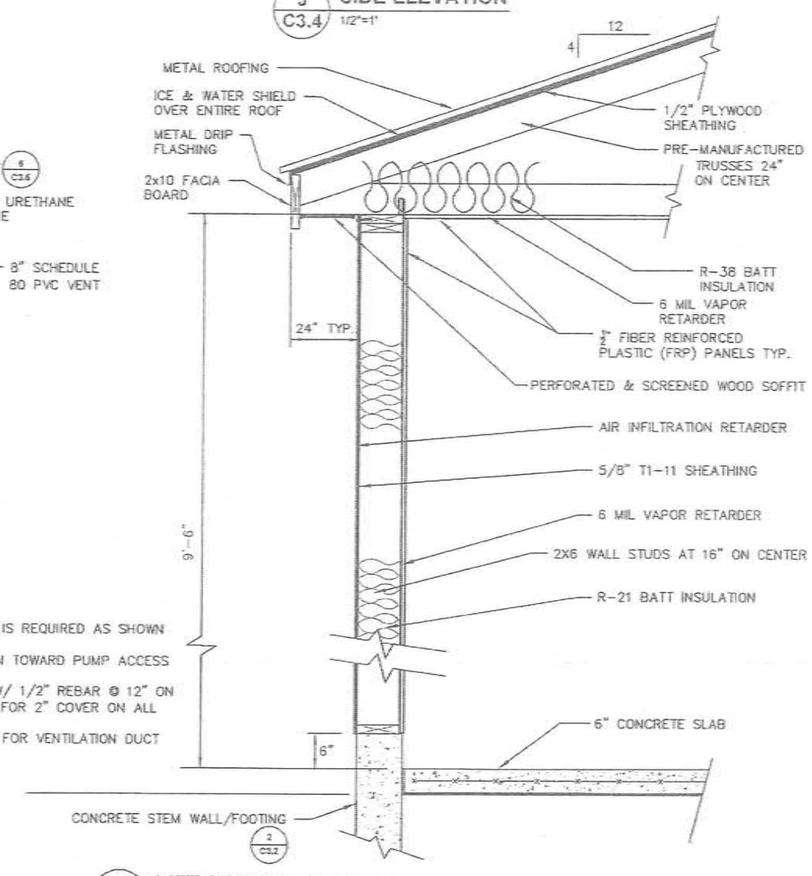

A C3.4 LIFT STATION WALL SECTION 1/2"=1'

RECORD DRAWING CERTIFICATE

THESE DRAWINGS REFLECT RECORDED INFORMATION OBTAINED DURING CONSTRUCTION. INFORMATION PROVIDED HEREIN IS ACCURATE TO THE BEST OF MY KNOWLEDGE.

NAME _____ DATE _____

SCALE:

BAR IS 1" ON FULL SIZE ORIGINAL DRAWING. IF NOT ONE INCH ON THIS SHEET, ADJUST SCALES ACCORDINGLY

VILLAGE SAFE WATER ALASKA

STATE OF ALASKA 49TH Frank A. Parish Jr. 12-31-11 REGISTERED PROFESSIONAL ENGINEER

2010-11 WASTEWATER SYSTEM IMPROVEMENTS

BUILDING SECTION AND DETAILS

TULUKSAK, ALASKA

CE2 ENGINEERS, INC.
PO BOX 220646 ANCHORAGE, AK 99503 PH: 907-349-1010 FAX: 907-349-1015

REVISION	BY	DATE

Project No. _____ Date JUNE 2009 Designed LAP Drawn VBW Approved LAP

Sheet No. C3.4

G:\ACAD\TULUKSAK\TL10901 2008 Waste water disposal area\C3.2_THRU_3.6 revised format.dwg, 1/11/2011 1:14:22 PM, cmerz, LANIER MP C2050_LD520C PCL 6.pc3

NOTES:

1. PREMANUFACTURED LADDER AND BASKET WITH VERTICAL BAR SCREEN. SIMILAR TO HALLIDAY PRODUCTS, LADDER L1B & TRASH BASKET B1B, OR APPROVED EQUAL. STANDARD FEATURES SHALL INCLUDE:
   - ALL ALUMINUM BASKET AND RAILS
   - SOLID ALUMINUM WHEELS AND STAINLESS STEEL AXLES
   - HEAVY DUTY LADDER/GUIDERAIL COMBINATION
   - SLIP RESISTANT RUNGS
   - BAR SCREEN STYLE BASKET
2. REQUIRED INFORMATION
   - WET WELL DIAMETER
   - RAIL/LADDER LENGTH
   - STANDOFF LENGTH (10" MIN FOR LADDER COMBO)
   - FIELD VERIFY DISTANCE REQUIRED FOR BASKET TO CLEAR THE FINISH ACCESS OPENING.

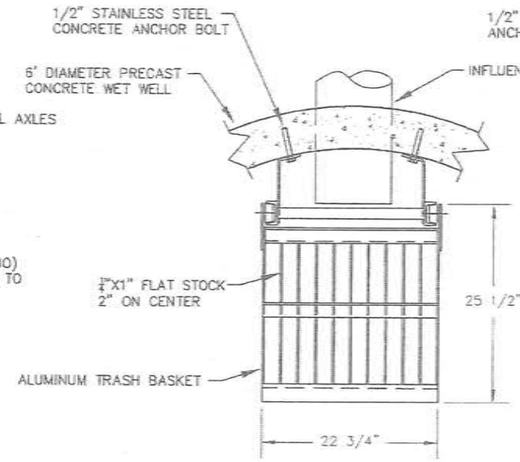

1 C3.5 PLAN VIEW
NTS

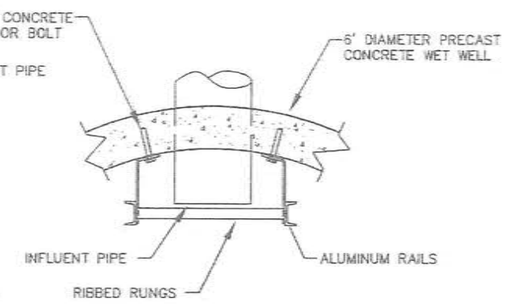

2 C3.5 LADDER SUPPORT DETAIL
NTS

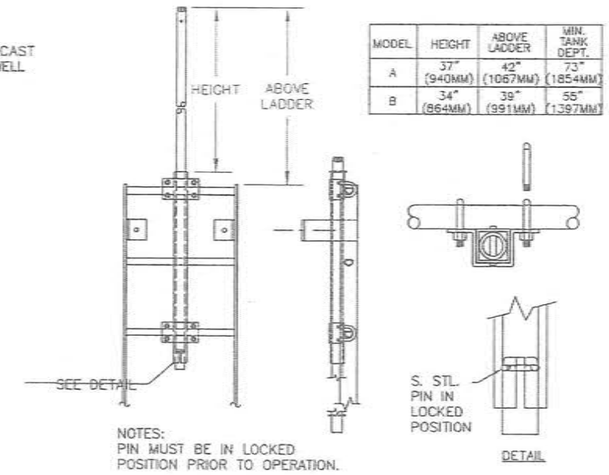

MODEL	HEIGHT	ABOVE LADDER	MIN. TANK DEPT.
A	37" (940MM)	42" (1067MM)	73" (1854MM)
B	34" (864MM)	39" (991MM)	55" (1397MM)

NOTES:
PIN MUST BE IN LOCKED POSITION PRIOR TO OPERATION.

8 C3.5 LADDER EXTENSION DETAIL
NTS

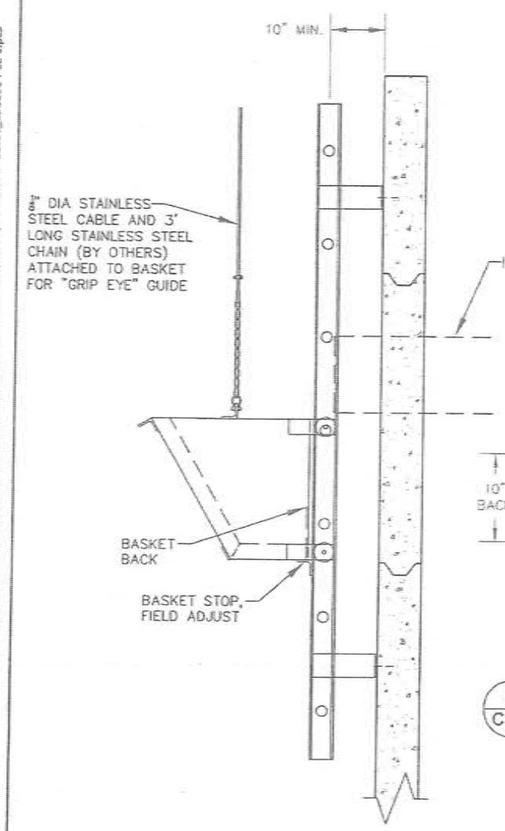

3 C3.5 LADDER/BASKET SIDE VIEW
NTS

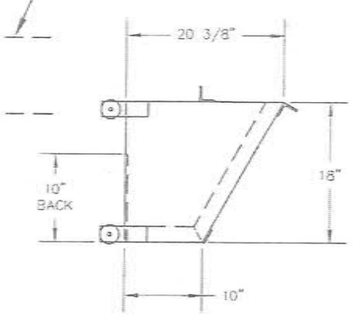

4 C3.5 BASKET SIDE VIEW
NTS

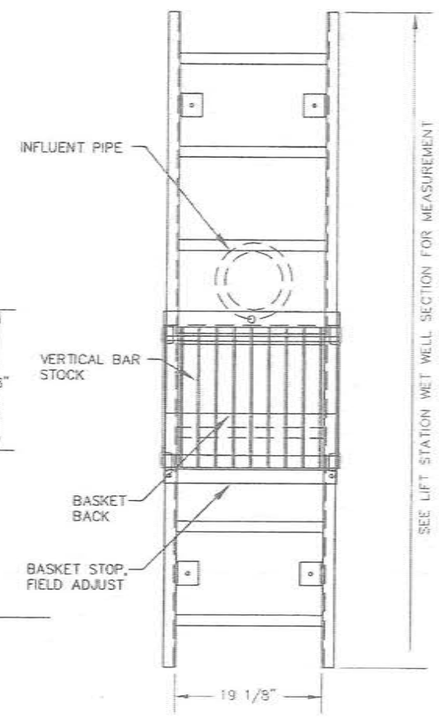

5 C3.5 LADDER/BASKET FRONT VIEW
NTS

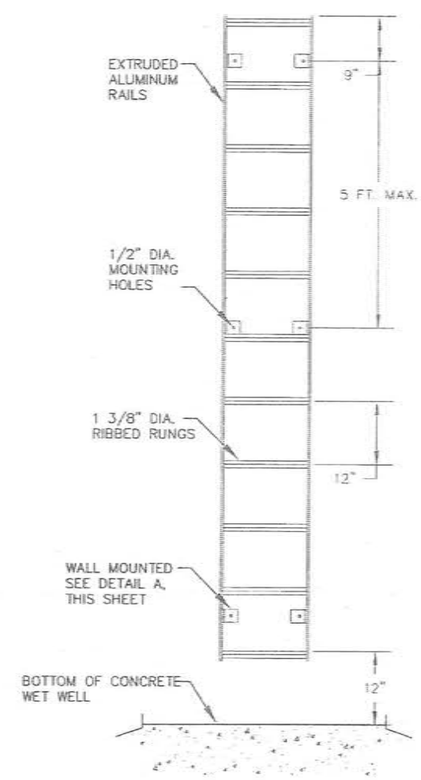

6 C3.5 LADDER FRONT VIEW
NTS

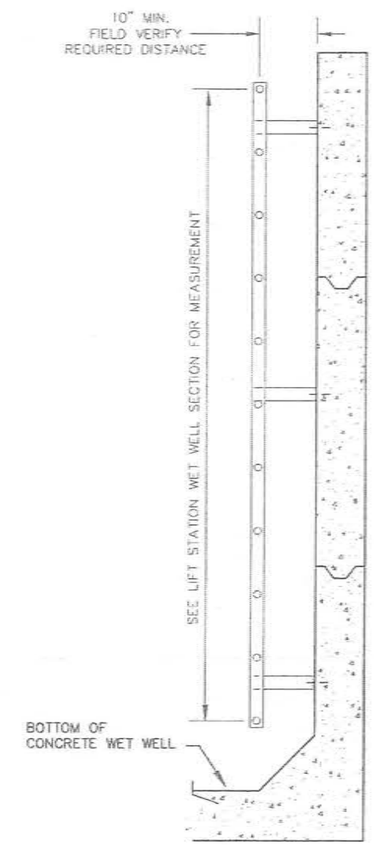

7 C3.5 LADDER SIDE VIEW
NTS

RECORD DRAWING CERTIFICATE
THESE DRAWINGS REFLECT RECORDED INFORMATION OBTAINED DURING CONSTRUCTION. INFORMATION PROVIDED HEREIN IS ACCURATE TO THE BEST OF MY KNOWLEDGE.
NAME ____ DATE ____

SCALE:

2010-11 WASTEWATER SYSTEM IMPROVEMENTS
LIFT STATION LADDER DETAILS
TULUKSAK, ALASKA

CE2 ENGINEERS, INC.
PO BOX 223584 ANCHORAGE, AK 99522 PH: 907-349-1019 FAX: 907-349-1015

REVISION	BY	DATE

Project No. ____
Date JUNE 2009
Designed LAP
Drawn VSW
Approved LAP

Sheet No. C3.5

G:\ACAD\TULUKSAK\TLT0901 2008 Waste water disposal area\C3.2_THRU_3.6 revised format.dwg, 1/11/2011 1:20:38 PM, cmarz, LANIER MP C2050_LD520C PCL 6.pc3

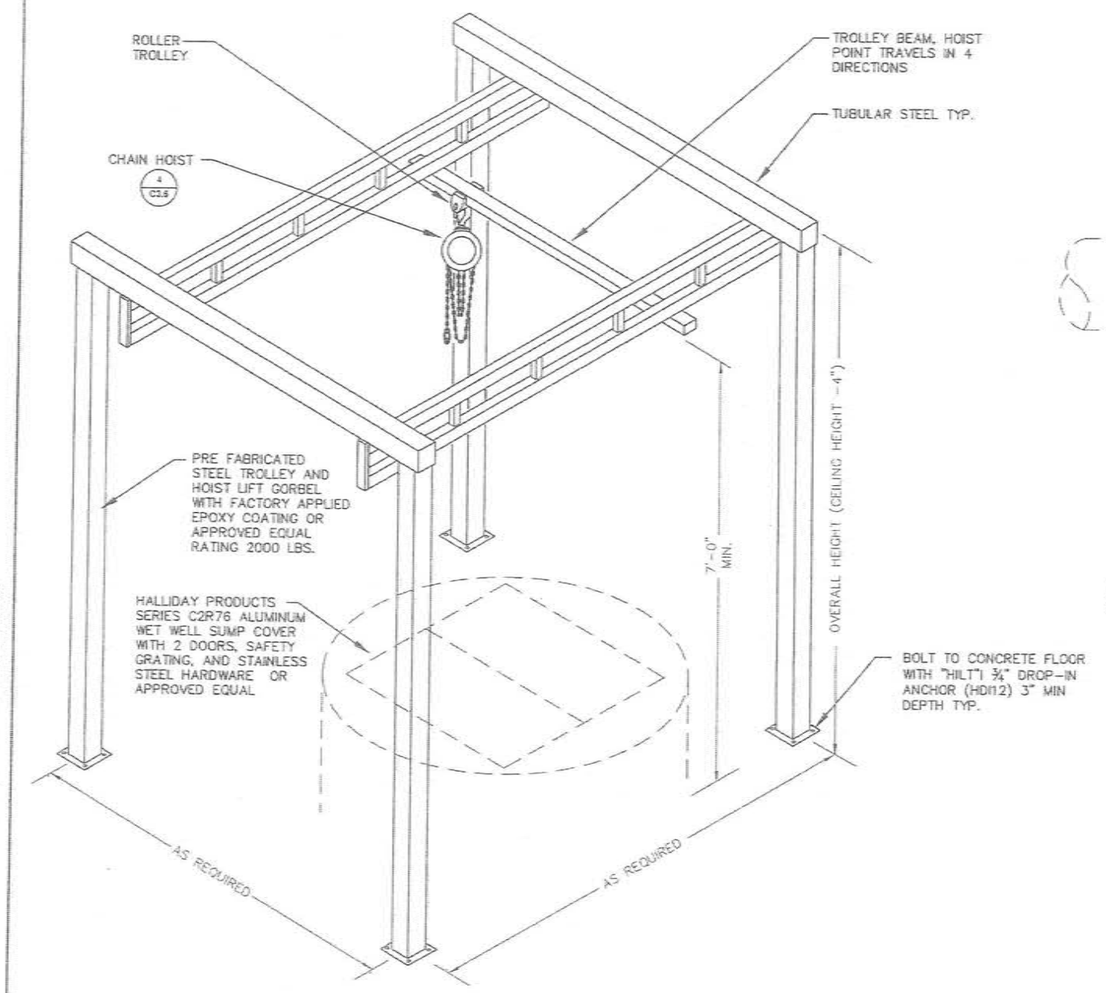

1 C3.6 TROLLEY FRAME DETAIL
NTS

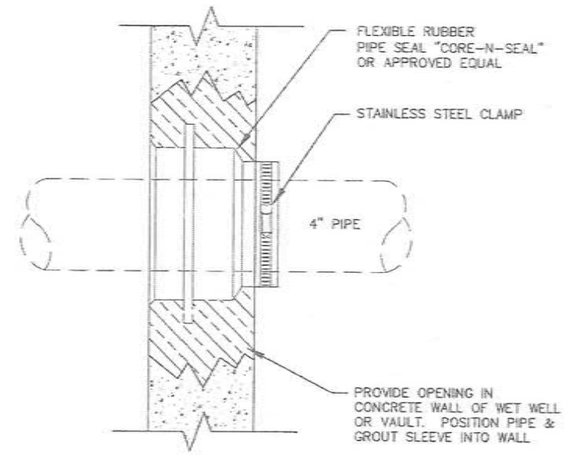

2 C3.6 PIPE SLEEVE DETAIL
NTS

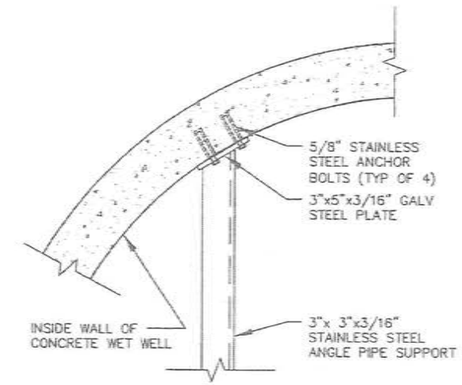

3 C3.6 PIPE SUPPORT DETAIL
NTS

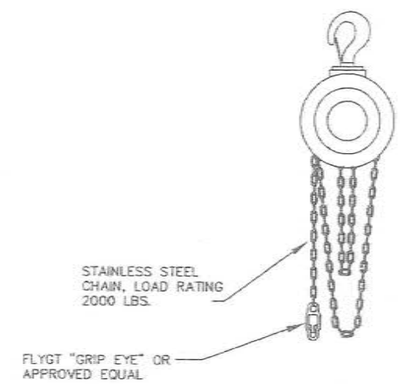

4 C3.6 CHAIN HOIST
NTS

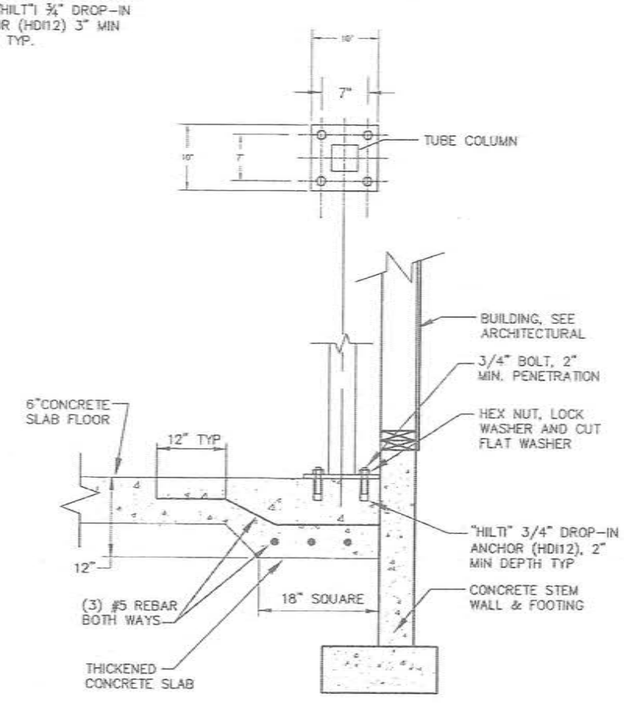

6 C3.6 HOIST SUPPORT DETAIL
NTS

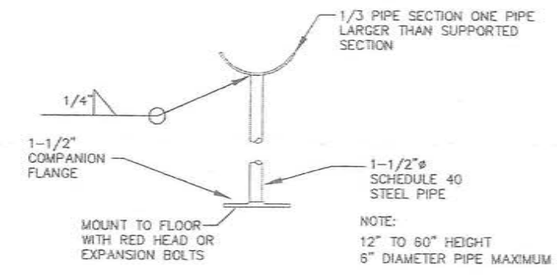

7 C3.6 FLOOR MOUNT PIPE SUPPORT DETAIL
NTS

RECORD DRAWING CERTIFICATE
THESE DRAWINGS REFLECT RECORDED INFORMATION OBTAINED DURING CONSTRUCTION. INFORMATION PROVIDED HEREIN IS ACCURATE TO THE BEST OF MY KNOWLEDGE.
NAME DATE

SCALE:

2010-11 WASTEWATER SYSTEM IMPROVEMENTS
LIFT STATION HOIST AND PIPE SUPPORT DETAILS
TULUKSAK, ALASKA

CE2 ENGINEERS, INC.
PO BOX 210348 ANCHORAGE, AK 99503 PH: 907-349-9616 FAX: 907-349-1815

REVISION	BY	DATE

Project No. ____ Date JUNE 2009
Designed LAP
Drawn VSW
Approved LAP

Sheet No. C3.6

G:\ACAD\TULUKSAK\TLT0901 2008 Waste water disposal area\C3.2_THRU_3.6 revised format.dwg, 1/11/2011 1:21:05 PM, cnerz, LANIER MP C2050_LD520C PCL 6.pc3

WASTEWATER LAGOON DESIGN CRITERIA

Assumptions	Qty.	Unit	Notes
2010 Population	373	People	U.S. Census
2033 Design Population	421	People	
Design Flow Rate: School Population: 170 persons x 15 Gal/Cap-Day = 2,550 gpd School Staff: 15 persons x 70 Gal/Cap-Day = 1,050 gpd Remaining Population: 236 persons x 5 Gal/Cap-Day = 1,180 gpd Washeteria: 5,000 gpd Total: 9,780 gpd Round up to: 10,000 gpd	10000	Gpd	Calculated
BOD per person	0.17	lbs/Cap-Day	Minimum loading suggested by Ten States Standards (referred to by ADEC).
Treatment Cell BOD Loading (Maximum)	30	lbs/acre	ADEC Lagoon Construction Guidelines for percolation lagoons.
Treatment Cell Hydraulic Retention Time (HRT)	60	Days	Assumed
Treatment Cell Maximum Depth	10	Feet	ADEC Lagoon Construction Guidelines for percolation lagoons.
Percolation Days Per Year	365	Days	Assumed
2033 Design Conditions			
Average Daily Flow	10,000	Gallons	Calculated
BOD/day production	71.6	lbs	Calculated
Treatment Cell Size (based on BOD Loading)	2.4	Acres	Calculated
Treatment Cell Volume	750,000	Gallons	Min. HRT plus 25% Sludge Holding Cap.
Treatment Cell Average Depth	7.00	Feet	Use 7 Foot min. depth for freeze protection.
Required Percolation Cell Holding Volume (non-perk Days)	-	Gallons	
Percolation Calculations			
Average Perc Rate	5.6	min./in.	Measured average of 3 perc tests
Saturation Test Loading	40	min./in.	Measured
Daily Loading Rate	0.90	Gal/Sq.Ft.-Day	Seepage Pit Loading Rate from the 10-States Standard for Individual Sewage Systems, 1980 Edition, for Perc Rate 6-10 min./in.
Required Percolation Cell Floor Area	11,111	Sq. Feet	
Calculated Average Winter Holding Depth	8.00	Feet	
Proposed Lagoon Sizing			
Treatment Cell Size	2.4	Acres	
Treatment Cell Volume	4,778,182	Gallons	
Treatment Cell Calculated HRT	478	Days	
Percolation Cell Floor Area	1.0	Acres	
Percolation Cell Winter Storage Volume	2,521,370	Gallons	OK. > Req. Holding Cell Volume. 8 Foot Max. Depth

RECORD DRAWING CERTIFICATE
THESE DRAWINGS REFLECT RECORDED INFORMATION OBTAINED DURING CONSTRUCTION. INFORMATION PROVIDED HEREIN IS ACCURATE TO THE BEST OF MY KNOWLEDGE.
NAME DATE

SCALE:
BAR IS ONE INCH ON ORIGINAL DRAWING
0 1"
IF NOT ONE INCH ON THIS SHEET, ADJUST SCALES ACCORDINGLY

VILLAGE SAFE WATER ALASKA

STATE OF ALASKA 49TH REGISTERED PROFESSIONAL ENGINEER Michael R. Erdman No. 8252
6/17/14

2010-11 WASTEWATER SYSTEM IMPROVEMENTS
LAGOON SITE PLAN AND DESIGN CRITERIA
TULUKSAK, ALASKA

CE2 ENGINEERS, INC.
PO BOX 223094 ANCHORAGE, AK 99523 PH: 907-349-1010 FAX: 907-349-1015

REVISION	BY	DATE
LAGOON RELOCATION	CM	4/14
LAGOON RELOCATION	CM	4/14
PERC. CELL RESIZED	CM	6/14
TABLE UPDATE	CM	8/14

Project No. ____
Date APRIL 2014
Designed MRE
Drawn CM/LAW
Approved MRE

Sheet No.
C4.0

G:\ACAD\TULUKSAK\TLT0901 2008 Waste water disposal area\IFC Rev June 2014\C4.0 LAGOON DESIGN CRITERIA.dwg, 6/17/2014 12:54:46 PM, cmerz, LANIER MP C2050_LD520C PCL 6 COLOR.pc3

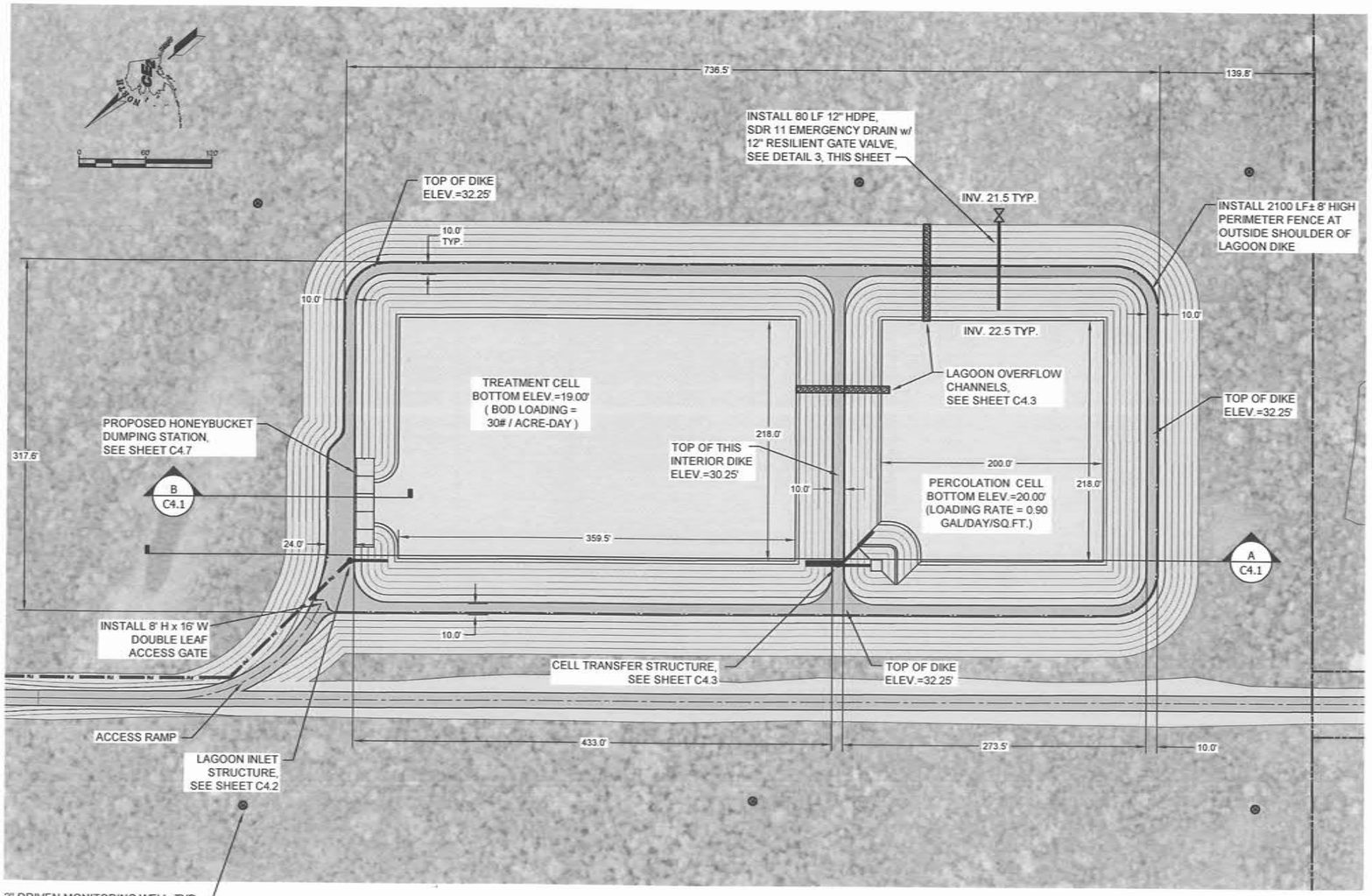

1 C4.1 WASTEWATER TREATMENT LAGOON PLAN
SCALE: 1"=60'

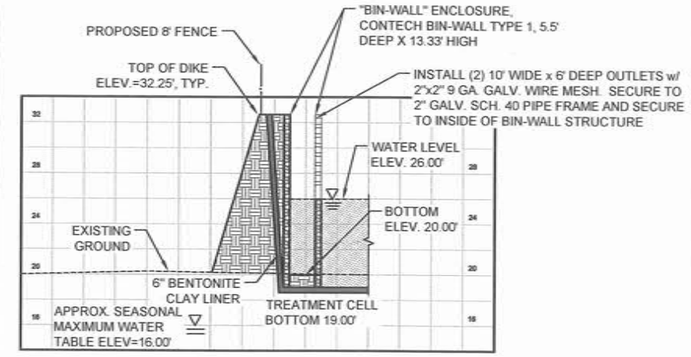

HONEYBUCKET DUMP STATION - SECTION B

SCALE: HOR. 1"=60', VERT. 1"=6'

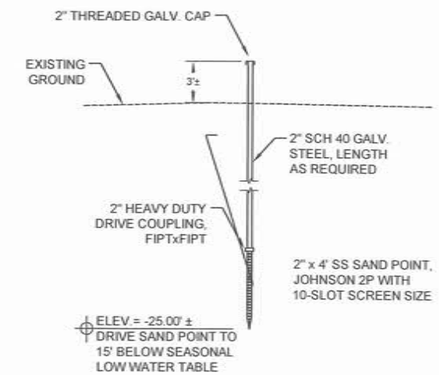

2 C4.1 DRIVEN MONITORING WELL DETAIL
SCALE: NTS

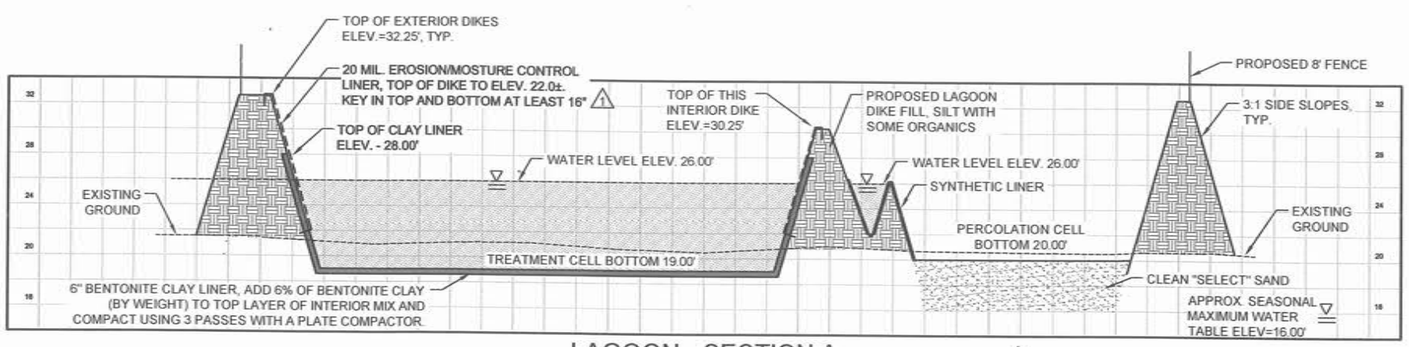

LAGOON - SECTION A

SCALE: HOR. 1"=60', VERT. 1"=6'

1 REEF IND. PERMALON 20 MIL OR APPROVED EQUAL

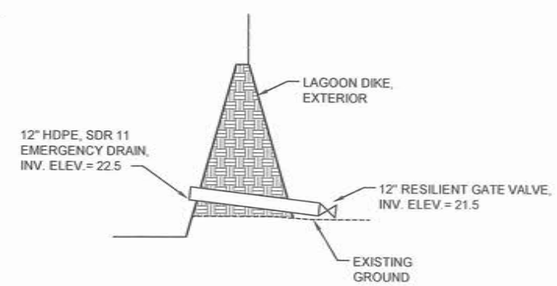

3 C4.1 EMERGENCY DRAIN DETAIL
SCALE: NTS

RECORD DRAWING CERTIFICATE
THESE DRAWINGS REFLECT RECORDED INFORMATION OBTAINED DURING CONSTRUCTION. INFORMATION PROVIDED HEREIN IS ACCURATE TO THE BEST OF MY KNOWLEDGE.
NAME ____ DATE ____

SCALE: AS SHOWN

BAR IS ONE INCH ON ORIGINAL DRAWING
0 1"
IF NOT ONE INCH ON THIS SHEET, ADJUST SCALES ACCORDINGLY

VILLAGE SAFE WATER ALASKA

SURVEYING PROFESSIONAL ALASKA 49TH STATE OF ALASKA Michael R. Erdman No.6252 6/17/14

2010-11 WASTEWATER SYSTEM IMPROVEMENTS
LAGOON PLAN AND PROFILE
TULUKSAK, ALASKA

CE2 ENGINEERS, INC.
PO BOX 232046 ANCHORAGE, AK 99523 PH: 907-349-1010 FAX: 907-349-1015

REVISION	BY	DATE
NOTES ADDED	LAW	2/10
LAGOON RELOCATION	CM	8/10
LAGOON RELOCATION	CM	4/14
PERC. CELL RESIZED	CM	6/14

Project No. ____
Date APRIL 2014
Designed MRE
Drawn CM
Approved MRE

Sheet No. C4.1

G:\ACAD\TULUKSAK\TLT0901 2008 Waste water disposal area\IFC Rev June 2014\C4.1 LAGOON PLAN AND PROFILE.dwg, 6/17/2014 4:19:09 PM, cmerz, LANIER HP C2050_LDS20C PCL 6 COLOR.pc3

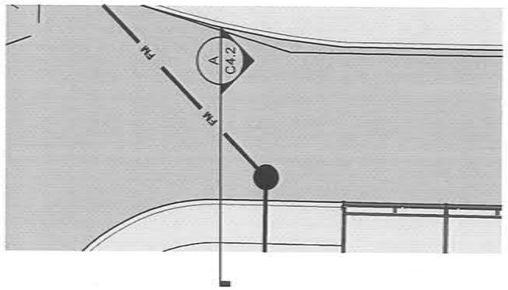

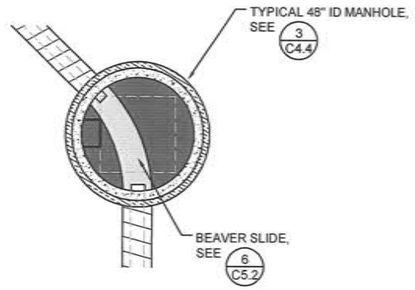

1 C4.2 LAGOON INLET STRUCTURE PLAN
NTS

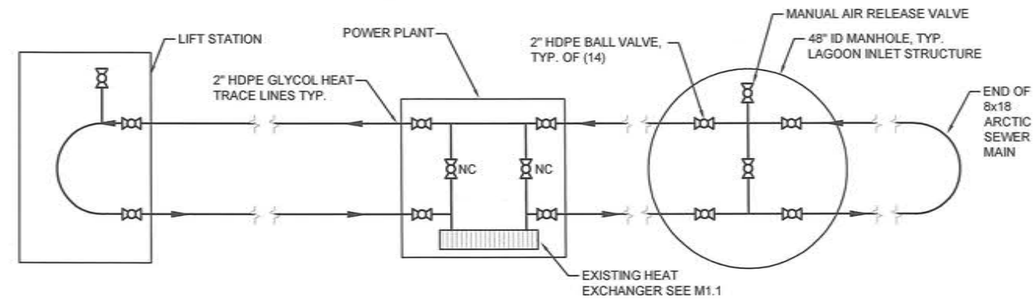

2 C4.2 GLYCOL HEAT TRACE SCHEMATIC
NTS

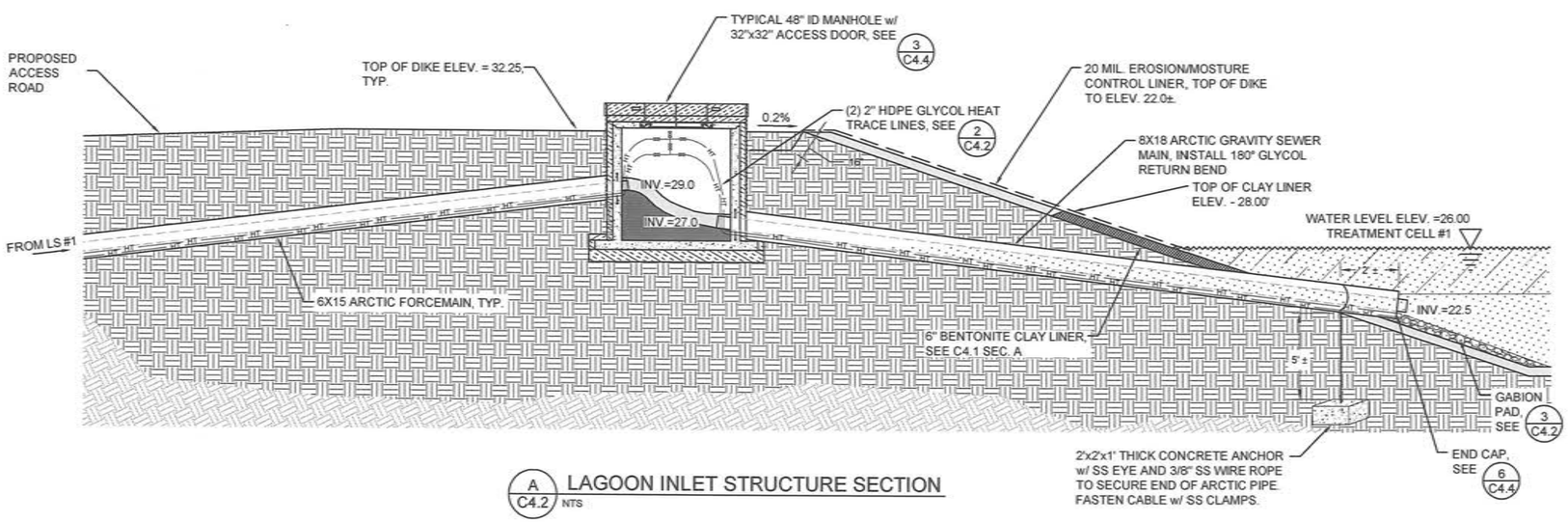

A C4.2 LAGOON INLET STRUCTURE SECTION
NTS

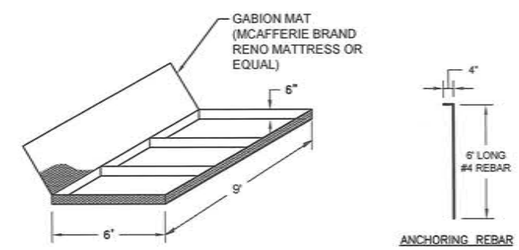

NOTES:
1. GABIONS SHALL BE LINED WITH A U.V. RESISTANT, WOVEN GEOTEXTILE AMOCO 2016 OR EQUAL, PRIOR TO BEING FILLED. AFTER LINING, GABIONS SHALL BE FILLED, PER MANUFACTURER'S RECOMMENDED PROCEDURES, WITH IMPORTED ROCK OR BROKEN CONCRETE (3"–4" PARTICLE SIZE).
2. ANCHOR GABIONS INSTALLED ON SLOPES USING 6' LONG, HOOKED #4 REBAR, AS NECESSARY.
3. INTERLOCK GABION "MATTRESSES" USING HOG RINGS AT 1' O.C.

3 C4.2 GABION MAT DETAILS
NTS

RECORD DRAWING CERTIFICATE
THESE DRAWINGS REFLECT RECORDED INFORMATION OBTAINED DURING CONSTRUCTION. INFORMATION PROVIDED HEREIN IS ACCURATE TO THE BEST OF MY KNOWLEDGE.
NAME _____ DATE _____

SCALE: AS SHOWN
BAR IS ONE INCH ON ORIGINAL DRAWING
0 1"
IF NOT ONE INCH ON THIS SHEET, ADJUST SCALES ACCORDINGLY

WELLNESS SAFE WATER ALASKA

5/7/14
REGISTERED PROFESSIONAL ENGINEER STATE OF ALASKA 49TH Michael R. Eichman No.6252

2010-11 WASTEWATER SYSTEM IMPROVEMENTS
LAGOON INLET STRUCTURE
TULUKSAK, ALASKA

CE2 ENGINEERS, INC.
PO BOX 223048 ANCHORAGE, AK 99523 PH: 907-349-1010 FAX: 907-349-1015

REVISION	BY	DATE
NOTES ADDED	AW	2/10
LAGOON RELOCATION	CM	4/14

Project No. ____
Date APRIL 2014
Designed MRE
Drawn CM
Approved MRE

Sheet No.
C4.2

G:\ACAD\TULUKSAK\TLT0901 2008 Waste water disposal area\IFC Rev Apr 2014\C4.2 INLET STRUCTURE.dwg, 5/6/2014 6:15:53 PM, cmerz, \\Ce2main\LANIER MP C2050/LD520C PCL 6

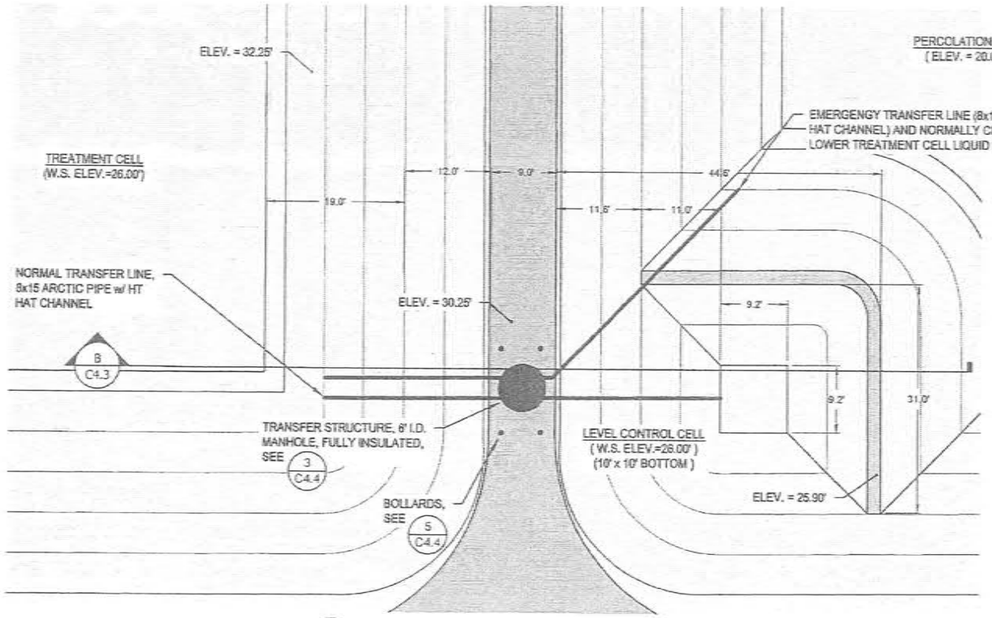

1 C4.3 CELL TRANSFER STRUCTURE PLAN
1" = 10'

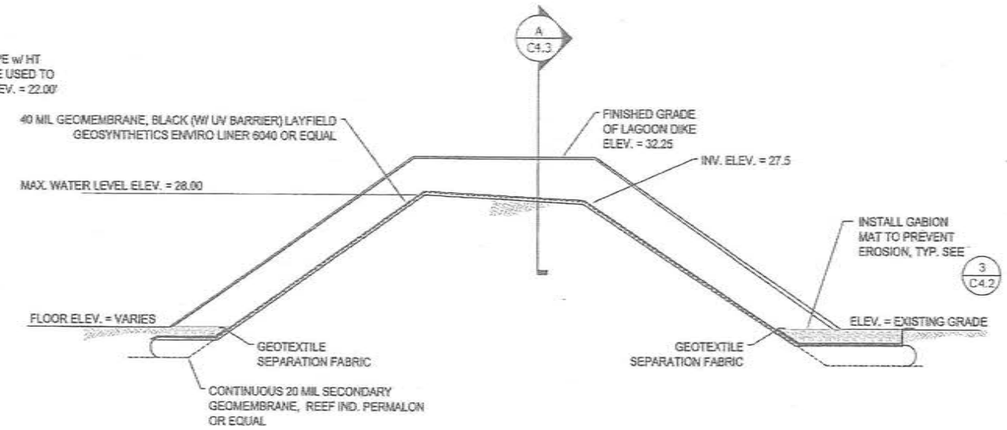

3 C4.3 CELL OVERFLOW CHANNEL
NTS

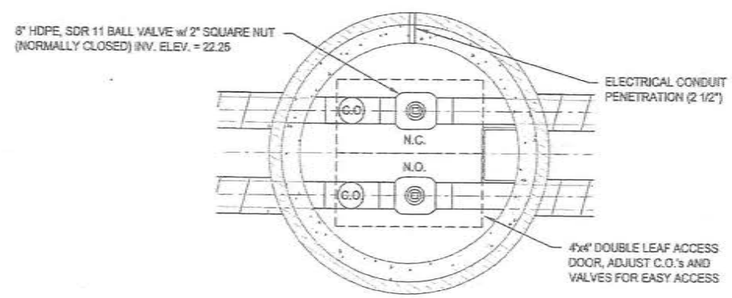

2 C4.3 CELL TRANSFER MANHOLE
1/2" = 1'-0"

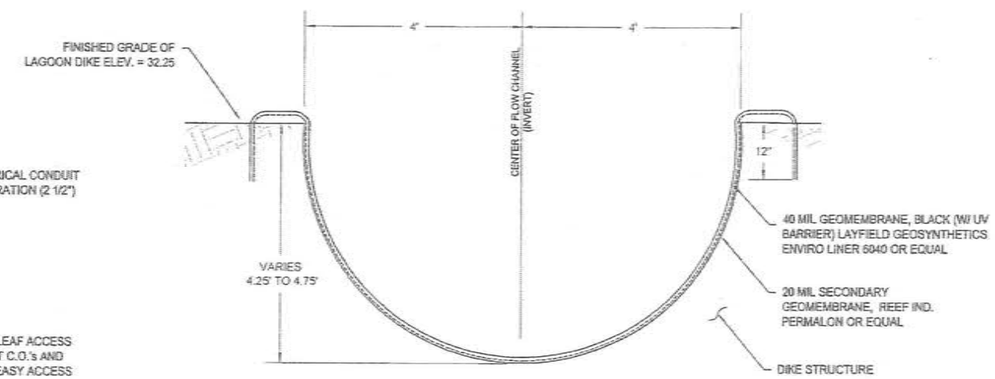

A C4.3 SECTION "A" TYPICAL CHANNEL CROSS-SECTION
3/4" = 1'-0"

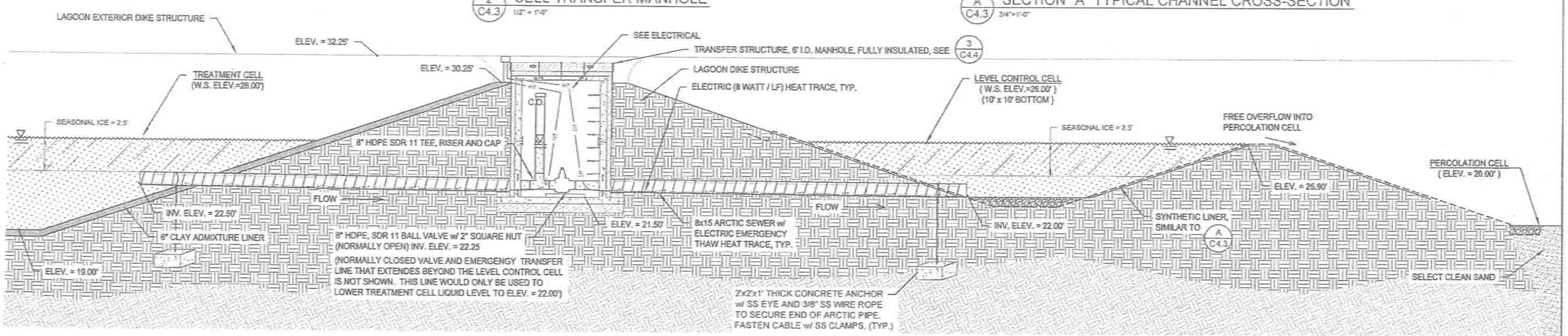

B C4.3 CELL TRANSFER SECTION
1/4" = 1'-0"

RECORD DRAWING CERTIFICATE
THESE DRAWINGS REFLECT RECORDED INFORMATION OBTAINED DURING CONSTRUCTION. INFORMATION PROVIDED HEREIN IS ACCURATE TO THE BEST OF MY KNOWLEDGE.
NAME _____ DATE _____

SCALE: AS SHOWN

2010-11 WASTEWATER SYSTEM IMPROVEMENTS

CELL TRANSFER STRUCTURE AND OVERFLOW CHANNELS
TULUKSAK, ALASKA

CE2 ENGINEERS, INC.
PO BOX 223244 ANCHORAGE, AK 99523 PH: 907-349-1019 FAX: 907-349-1015

REVISION	BY	DATE
NOTES ADDED	LAW	2/10

Project No. _____ Date JUNE 2009
Designed LAP
Drawn LAP
Approved LAP

Sheet No. C4.3

G:\ACAD\TULUKSAK\TLT090 2008 Waste water disposal area\C4.3 TRANSFER STRUCTURE 15 inch jacket.dwg, 1/11/2011 11:39:14 PM, Flash, LANTER HP C2050_LD520C PCL 68LK WHIT.pc3

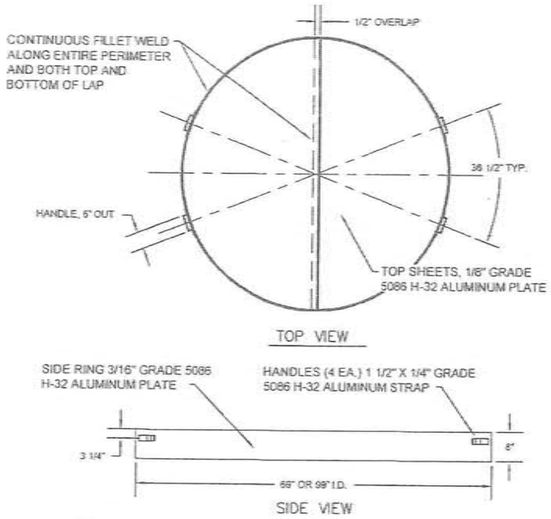

1 C4.4 REMOVABLE TOP COVER
NTS

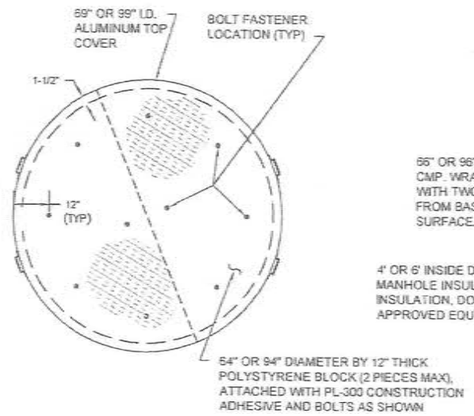

2 C4.4 INSULATION FASTENERS
NTS

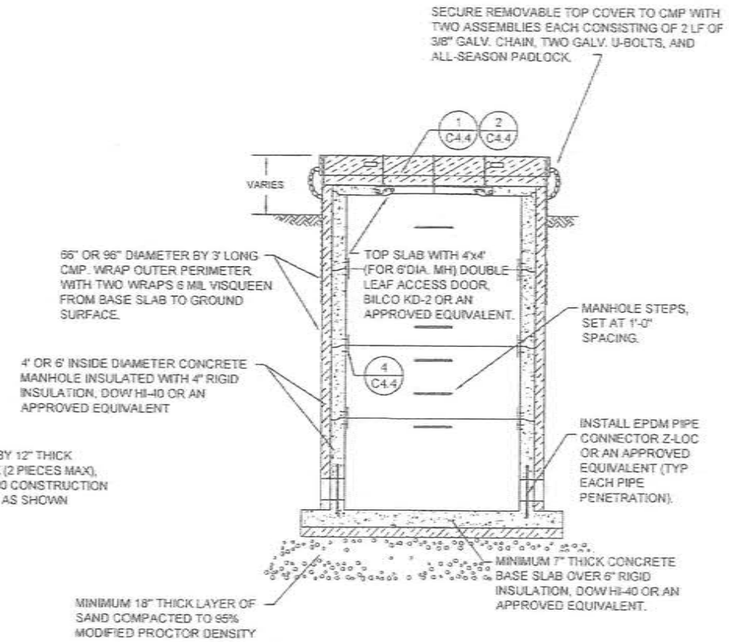

3 C4.4 MANHOLE STRUCTURE
NTS

CONTROL STRUCTURE INSTALLATION NOTES

1. PRECAST MANHOLE SECTIONS SHALL BE REINFORCED CONCRETE CONFORMING TO ASTM C-478.

2. THE MANHOLE BASE SHALL BE INTEGRALLY CAST WITH THE BOTTOM BARREL SECTION. FIELD GROUT FILLETS, AS REQUIRED.

3. RAM-NEK SEALANT OR AN ENGINEER APPROVED RUBBER GASKET SUPPLIED BY THE MANHOLE MANUFACTURER SHALL BE INSTALLED TO PROVIDE A COMPLETE, CONTINUOUS SEAL AT ALL PRECAST JOINTS.

4. FERRULE LOOP INSERTS AND JOINT STRAPS SHALL BE PROVIDED AS SHOWN.

5. EPDM PIPE CONNECTORS (Z-LOCK OR EQUAL) SHALL BE INSTALLED AT ALL PIPE PENETRATIONS.

6. MANHOLE COVER SHALL MEET ALASKA DEPARTMENT OF HIGHWAYS STANDARD SPECIFICATIONS (IFCO 740 OR EQUAL.) MANHOLE STEPS SHALL BE CAST IN PLACE AND SHALL BE 1/2" GRADE 60 STEEL REINFORCEMENT DIPPED IN COPOLYMER POLYPROPYLENE PLASTIC.

7. ALL PREFABRICATED ARCTIC PIPE FITTINGS SHALL BE FACTORY ASSEMBLED IN ACCORDANCE WITH THE DRAWINGS AND DELIVERED TO THE JOB SITE READY TO INSTALL.

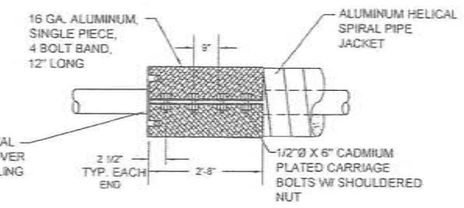

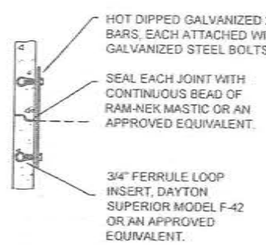

4 C4.4 JOINT STRAPPING
NTS

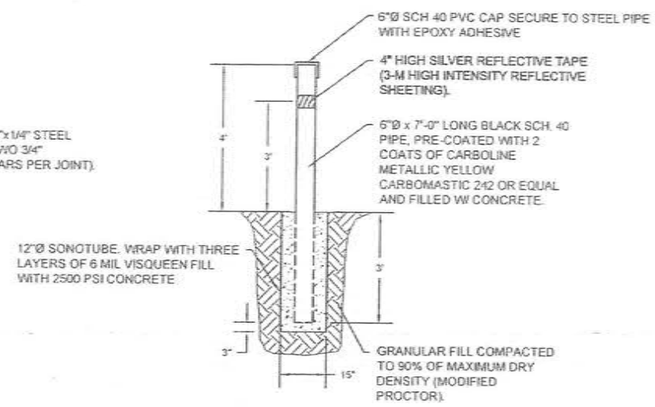

5 C4.4 BOLLARD
NTS

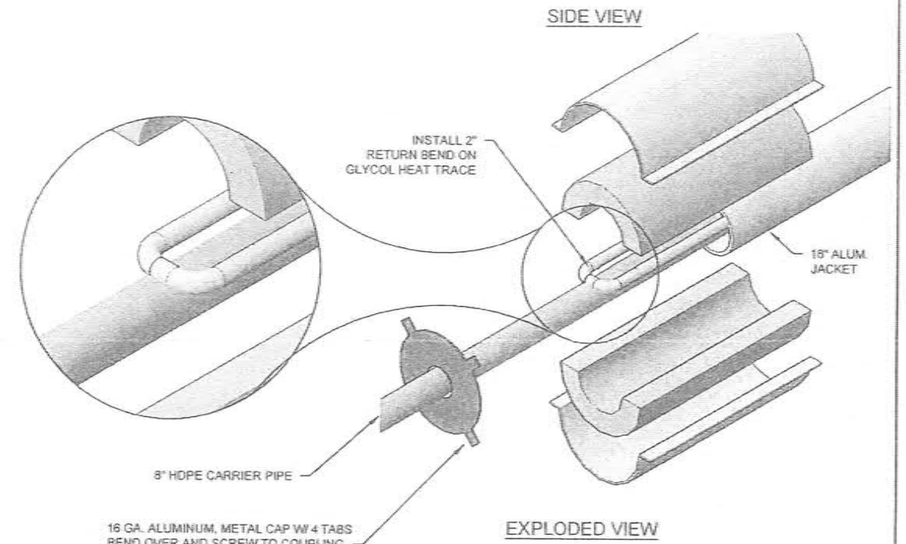

6 C4.4 END CAP
NTS

RECORD DRAWING CERTIFICATE
THESE DRAWINGS REFLECT RECORDED INFORMATION OBTAINED DURING CONSTRUCTION. INFORMATION PROVIDED HEREIN IS ACCURATE TO THE BEST OF MY KNOWLEDGE.
NAME _____ DATE _____

SCALE: AS SHOWN

2010-11 WASTEWATER SYSTEM IMPROVEMENTS

TYPICAL CONTROL STRUCTURE DETAILS

TULUKSAK, ALASKA

CE2 ENGINEERS, INC.
PO BOX 220344 ANCHORAGE, AK 99523 PH: 907-349-1010 FAX: 907-349-1015

REVISION	BY	DATE

Project No. ____
Date JUNE 2009
Designed GWF
Drawn DDR
Approved LAP

Sheet No. C4.4

G:\ACAD\TULUKSAK\TLT0901 2008 Waste water disposal area\C4-4 Typ Control Struc Dtls.dwg, 1/11/2011 1:39:45 PM, Plash, LANIER MP C2050_LD520C PCL 6BLK WHIT.pc3

1 / C4.5 EXISTING SCHOOL WASTEWATER LAGOON

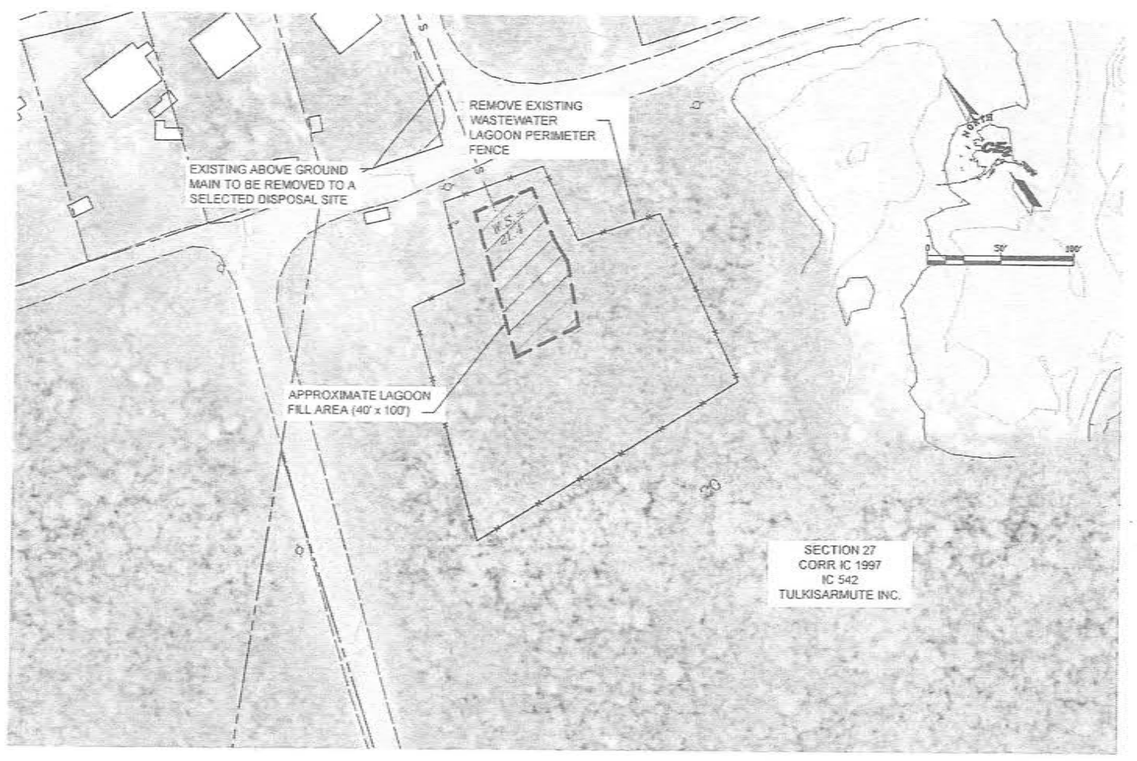

2 / C4.5 EXISTING COMMUNITY WASTEWATER LAGOON

CLOSE OUT PLAN OF EXISTING TULUKSAK WASTEWATER LAGOONS

OBJECTIVE:

- TO CLOSE OUT THE EXISTING SCHOOL WASTEWATER LAGOON AND THE EXISTING COMMUNITY LAGOON. THE LAGOONS ARE CURRENTLY IN USE. THE LAGOONS CAN BE ABANDONED UPON CONSTRUCTION OF THE PHASE I AND II WASTEWATER IMPROVEMENTS BEING CONSTRUCTED BY TULUKSAK NATIVE COMMUNITY (TNC) USING VILLAGE SAFE WATER FUNDING

ASSUMPTIONS:

- SLUDGE PROPOSED TO BE COVERED UNDER THIS PLAN IS ASSUMED NOT TO CONTAIN HAZARDOUS WASTES (SLUDGE HAS BEEN GENERATED FROM DOMESTIC WASTEWATER) AND DOES NOT CONTAIN CONCENTRATIONS OF POLYCHLORINATED BIPHENYLS (PCB) WASTES.
- SLUDGE TO BE COVERED UNDER THIS PLAN DOES NOT CONTAIN "FREE LIQUIDS" AS DEFINED BY EPA METHOD 9095 (PAINT FILTER LIQUIDS TEST) AND LIQUIDS ARE NOT IGNITABLE OR CORROSIVE.

CLOSURE PLAN:

- LIQUID CONTENTS OF THE LAGOONS AT THE TIME OF CLOSEOUT WILL BE PUMPED INTO THE NEW WASTEWATER SYSTEM FOR DISCHARGE INTO THE NEW COMMUNITY WASTEWATER LAGOON.
- AFTER PUMPING OUT THE LIQUID PORTION, SELECTIVE BRUSH CUTTING WILL PREPARE THE AREA TO BE CLOSED. THE BRUSH WILL BE HAULED TO THE COMMUNITY DISPOSAL SITE.
- THE REMAINING SLUDGE WILL BE TREATED WITH HYDRATED LIME TO DESTROY EXISTING PATHOGENS.

  1. SCHOOL LAGOON - UNIFORMLY SPREAD 2700# OF LIME OVER THE 90' X 100' AREA (3#/105Q. FT.)

  2. COMMUNITY LAGOON - UNIFORMLY SPREAD 1200# OF LIME OVER THE 40'X100' AREA (3#/10 SQ. FT.)

  LIME COVERAGE WILL BE AT THE RATE OF 50 POUNDS PER 1000 GALLONS OF SLUDGE. THE LIME WILL BE INTEGRATED INTO THE TOP THREE INCHES. THIS HYDRATED LIME ADDITION WILL BRING THE PH TO 12 FOR A MINIMUM OF THIRTY MINUTES.
- LOCAL SILT WILL BE PLACED OVER THE LIMED SLUDGE TO A DEPTH THAT PROVIDES DRAINAGE AWAY FROM THE AREA. MINIMUM DEPTH OF FILL WILL BE TWO FEET.
- AGGRESSIVELY REVEGETATE LAGOON COVER MATERIAL TO ELIMINATE EROSION OF NEW LAGOON COVER MATERIAL. (SEE GENERAL NOTES FOR REQUIREMENTS.)

RECORD DRAWING CERTIFICATE
THESE DRAWINGS REFLECT RECORDED INFORMATION OBTAINED DURING CONSTRUCTION. INFORMATION PROVIDED HEREIN IS ACCURATE TO THE BEST OF MY KNOWLEDGE.
NAME _____ DATE _____

SCALE: AS SHOWN

2010-11 WASTEWATER SYSTEM IMPROVEMENTS

EXISTING WASTEWATER LAGOON'S CLOSE-OUT

TULUKSAK, ALASKA

CE2 ENGINEERS, INC.
PO BOX 230568 ANCHORAGE, AK 99523 PH: 907-349-1810 FAX: 907-349-1815

REVISION	BY	DATE
LAGOON RELOCATION	LP	8/10

Project No. _____
Date SEPT 2010
Designed LAP
Drawn CM/LAW
Approved LAP

Sheet No. C4.5

G:\ACAD\TULUKSAK\TL-T0901 2008 Waste water disposal area\C4.6 SEWER SERVICE PLAN.dwg, 1/11/2011 1:43:01 PM, Flash, LANIER MP C2050_LD520C PCL 6BLK WHIT.pc3

RECORD DRAWING CERTIFICATE

THESE DRAWINGS REFLECT RECORDED INFORMATION OBTAINED DURING CONSTRUCTION. INFORMATION PROVIDED HEREIN IS ACCURATE TO THE BEST OF MY KNOWLEDGE.

NAME _____ DATE _____

SCALE: AS SHOWN

MAKE CHANGES IN GRAYSCALE, BACKGROUND

IF NOT THE SIZE IN THE LEFT, ADJUST SCALE IN LUMINOSITY

WILLAGE SAFE WATER

STATE OF ALASKA 49TH LAPHETH

2010-11 WASTEWATER SYSTEM IMPROVEMENTS

FIVE ARRA SERVICE LINES

TULUKSAK, ALASKA

CE2 ENGINEERS, INC.
PO BOX 220240 ANCHORAGE, AK 99523 PH: 907-561-1010 FAX: 907-349-1015

REVISION	BY	DATE
LAGOON RELOCATION	CM	8/10

Project No. _____
Date SEPT 2010
Designed LAP
Drawn CM/LAW
Approved LAP

Sheet No. C4.6

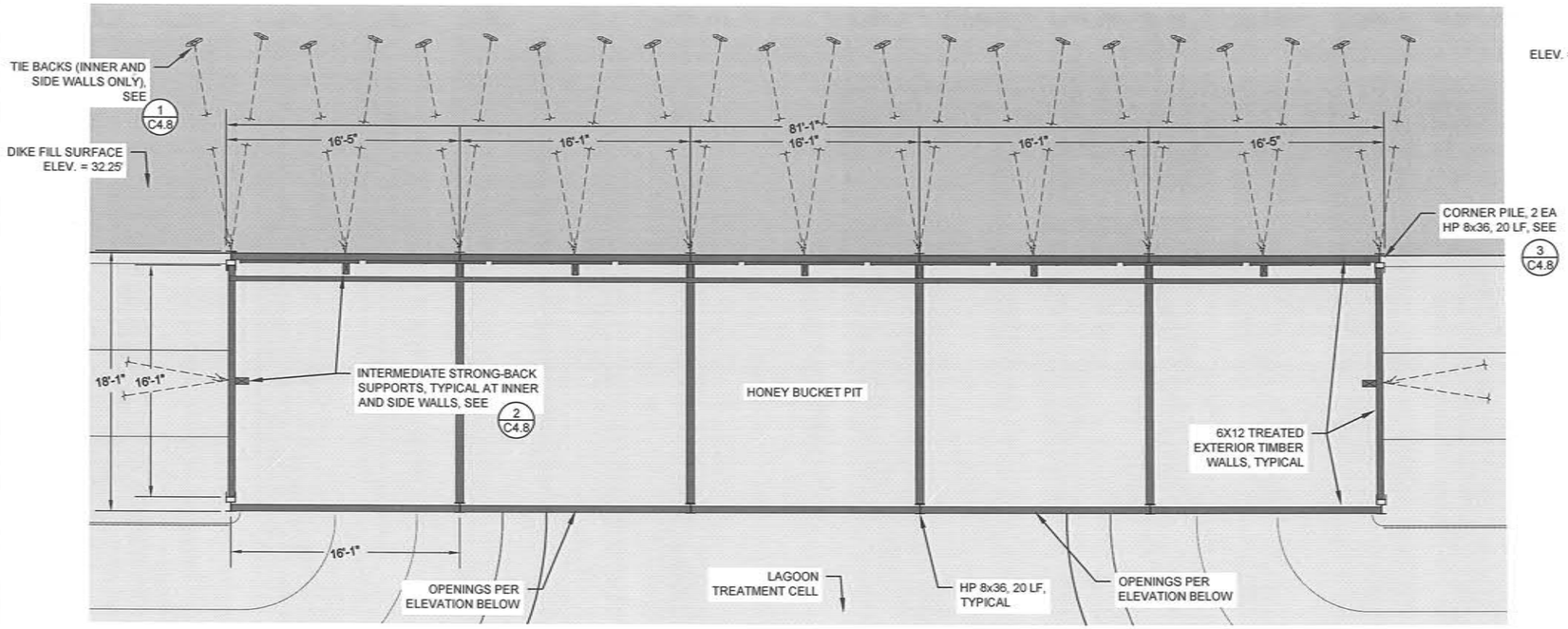

1 C4.7 HONEY BUCKET DUMP STATION PLAN
1"=5'

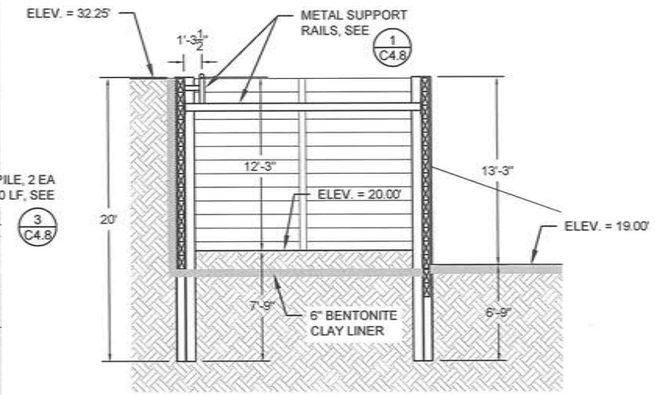

3 C4.7 HONEY BUCKET DUMP STATION SECTION
3/16" = 1'-0"

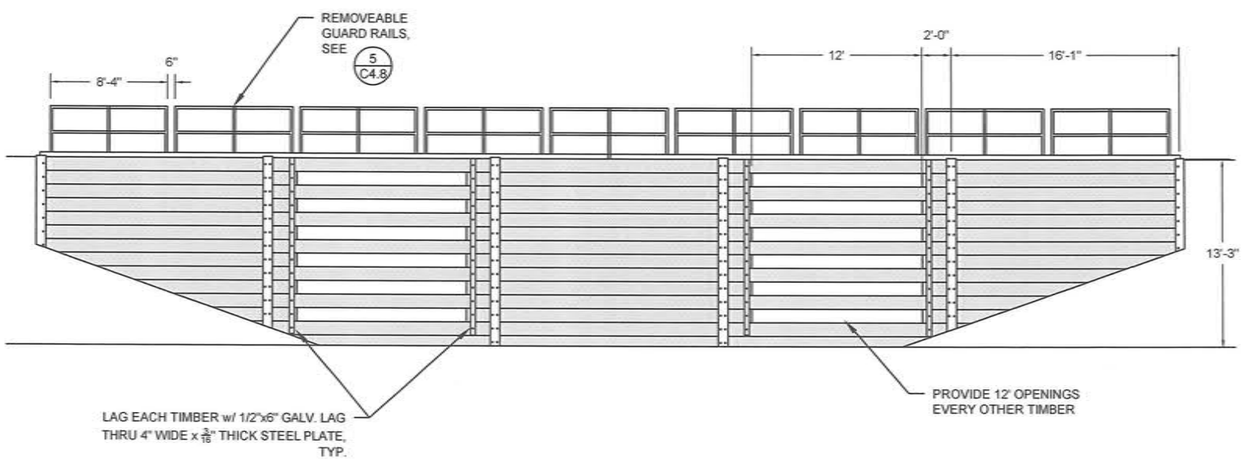

2 C4.7 HONEY BUCKET DUMP STATION ELEVATION
3/16" = 1'-0"

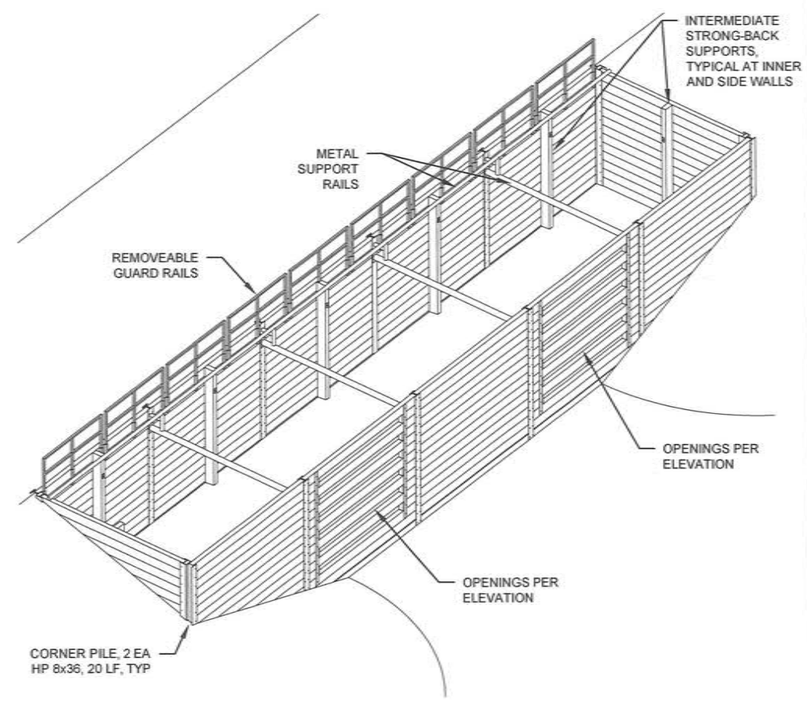

4 C4.7 HONEY BUCKET DUMP STATION ISOMETRIC
N.T.S.

RECORD DRAWING CERTIFICATE
THESE DRAWINGS REFLECT RECORDED INFORMATION OBTAINED DURING CONSTRUCTION. INFORMATION PROVIDED HEREIN IS ACCURATE TO THE BEST OF MY KNOWLEDGE.
NAME DATE

SCALE: AS SHOWN
BAR IS ONE INCH ON ORIGINAL DRAWING
0 1"
IF NOT ONE INCH ON THIS SHEET, ADJUST SCALES ACCORDINGLY

VILLAGE SAFE WATER ALASKA

STATE OF ALASKA 49TH Michael R. Eidman No.8262 REGISTERED PROFESSIONAL ENGINEER
5/7/14

2010-11 WASTEWATER SYSTEM IMPROVEMENTS
HONEY BUCKET DISPOSAL AREA PLAN
TULUKSAK, ALASKA

CE2 ENGINEERS, INC.
PO BOX 223044 ANCHORAGE, AK 99523 PH: 907-349-1019 FAX: 907-349-1018

REVISION	BY	DATE

Project No. ____
Date APRIL 2014
Designed LAP
Drawn CM
Approved MRE

Sheet No.
C4.7

G:\ACAD\TULUKSAK\TLT0901 2008 Waste water disposal area\IFC Rev Apr 2014\C4.7_8 Honey bucket dump station.dwg, 5/6/2014 5:13:55 PM, cmerz, \\Ce2main\LANIER MP C2050/LD520C PCL 6

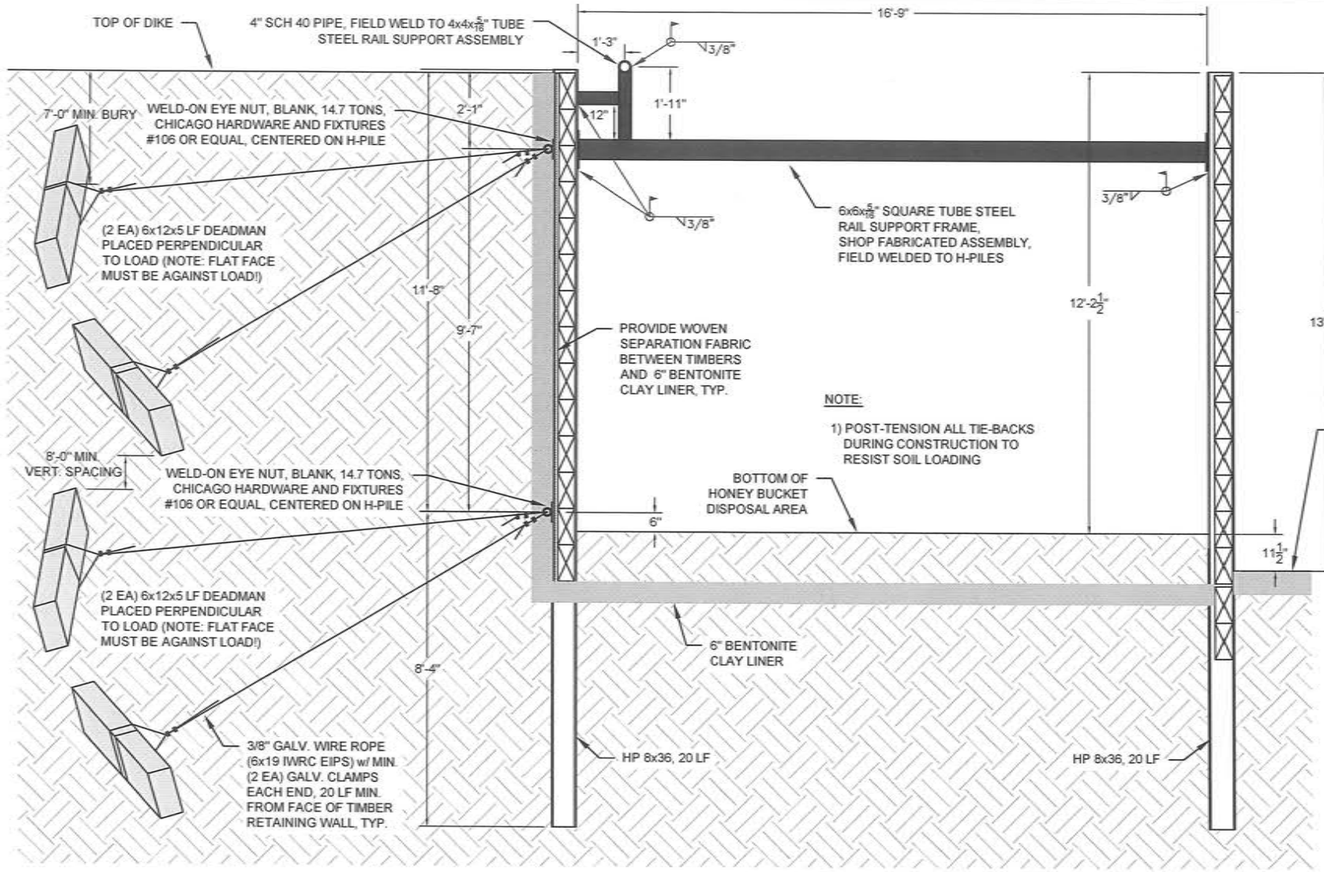

1 / C4.8 H-PILE SECTION VIEW
1/2" = 1'-0"

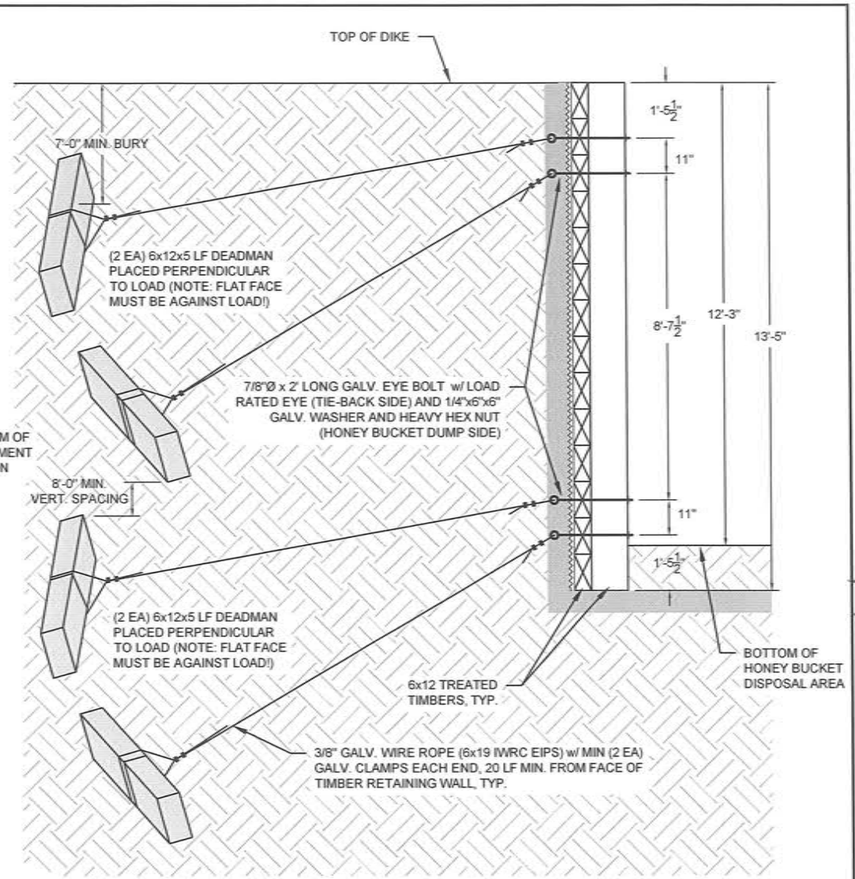

2 / C4.8 STRONG-BACK SECTION VIEW
1/2" = 1'-0"

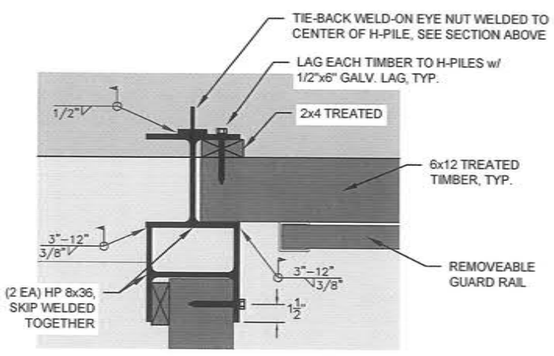

3 / C4.8 CORNER H-PILE PLAN VIEW
N.T.S.

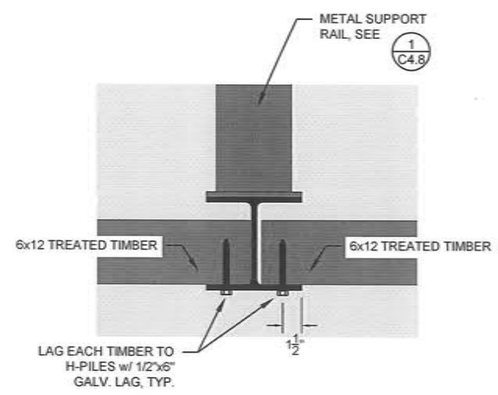

3 / C4.8 TYPICAL H-PILE PLAN VIEW
N.T.S.

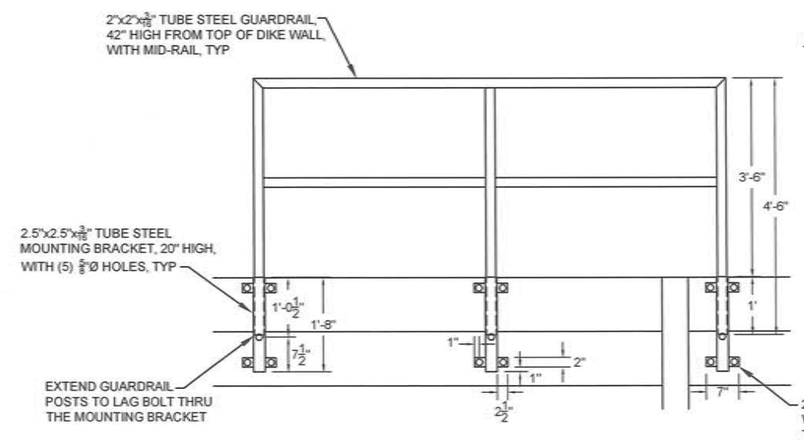

NOTES:

1) SHOP FABRICATE GUARDRAIL ASSEMBLIES. SEAL WELD ALL GUARDRAIL JOINTS. PRE-DRILL GUARDRAIL BRACKETS FOR FIELD CONNECTION.

2) UPON COMPLETION OF FABRICATION, ROUND ALL SHARP CORNERS AND GRIND EDGES SMOOTH. SANDBLAST TO SSPC-SP-10 AND HOT-DIP GALVANIZE.

5 / C4.8 REMOVEABLE GUARDRAIL CONNECTION
3/4" = 1'-0"

RECORD DRAWING CERTIFICATE
THESE DRAWINGS REFLECT RECORDED INFORMATION OBTAINED DURING CONSTRUCTION. INFORMATION PROVIDED HEREIN IS ACCURATE TO THE BEST OF MY KNOWLEDGE.
NAME
DATE

SCALE: AS SHOWN
BAR IS ONE INCH ON ORIGINAL DRAWING
0 1"
IF NOT ONE INCH ON THIS SHEET, ADJUST SCALES ACCORDINGLY

WILLOW SAFE WATER ALASKA

STATE OF ALASKA 49TH Michael R. Eardman No.6262 REGISTERED PROFESSIONAL ENGINEER
5/7/14

2010-11 WASTEWATER SYSTEM IMPROVEMENTS
HONEY BUCKET DISPOSAL AREA DETAILS
TULUKSAK, ALASKA

CE2 ENGINEERS, INC.
PO BOX 223948 ANCHORAGE, AK 99523 PH: 907-349-1010 FAX: 907-349-1015

REVISION	BY	DATE

Project No. ____
Date APRIL 2014
Designed LAP
Drawn CM
Approved MRE

Sheet No.
C4.8

G:\ACAD\TULUKSAK\TLT0901 2008 Waste water disposal area\IFC Rev Apr 2014\C4.7_8 Honey bucket dump station.dwg, 5/6/2014 5:28:33 PM, cmerz, \\Ce2main\LANIER MP C2050\LD520C PCL 6

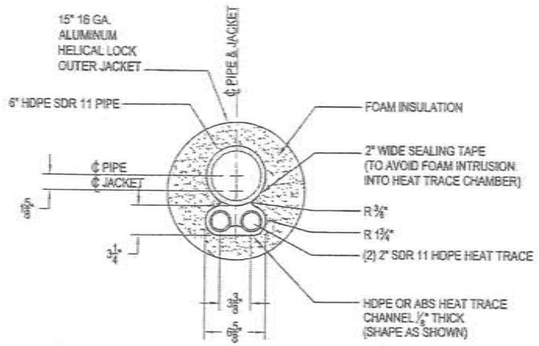

1 / C5.1 6" X 15" HDPE ARCTIC PIPE CROSS SECTION - GLYCOL TRACED

1 1/2"=1'-0"

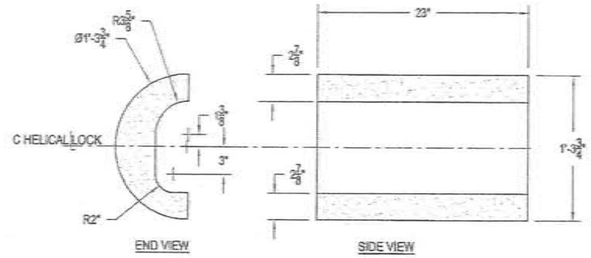

2 / C5.1 6" X 15" HDPE ARCTIC PIPE HALF SHELL - GLYCOL TRACED

1 1/2"=1'-0"

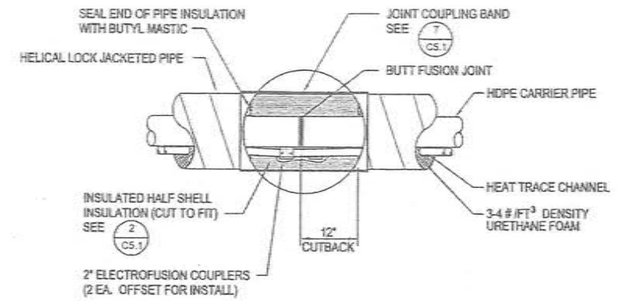

3 / C5.1 BUTT FUSION JOINT w/ HEAT TRACE ELECTROFUSION COUPLERS

NTS (FORCEMAIN ONLY)

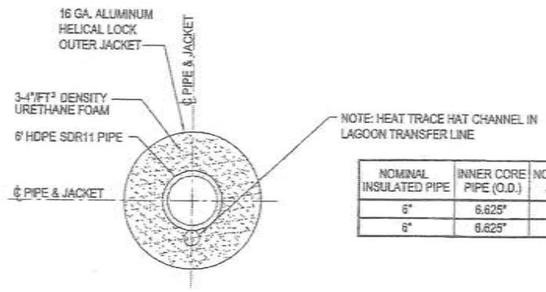

NOMINAL INSULATED PIPE	INNER CORE PIPE (O.D.)	NOMINAL OUTSIDE JACKET SIZE	AVERAGE OUTER JACKET SIZE (O.D.)
6"	6.625"	15" MIN.	15.75"
6"	6.625"	12" MIN.	12.75"

4 / C5.1 HDPE ARCTIC PIPE CROSS SECTION LAGOON TRANSFER LINE

NTS

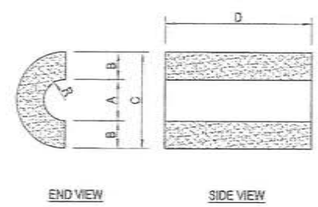

HALF SHELL	A	B	C	D
5"	6 1/4"	4 1/2"	15 3/4"	23"
6"	6 1/4"	3"	12 3/4"	23"

R=A/2

C=OUTSIDE DIAMETER

5 / C5.1 INSULATION HALF SHELL DETAIL

NTS

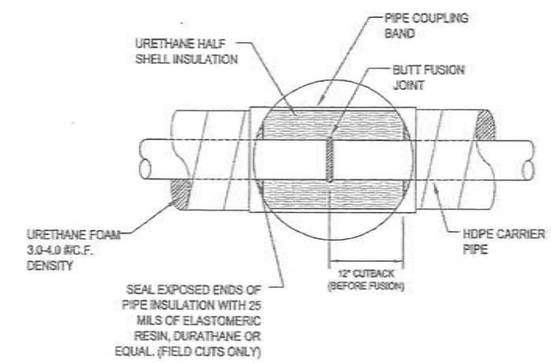

6 / C5.1 BUTT FUSED JOINT DETAIL

NTS (WATERMAIN AND SERVICE DUCT)

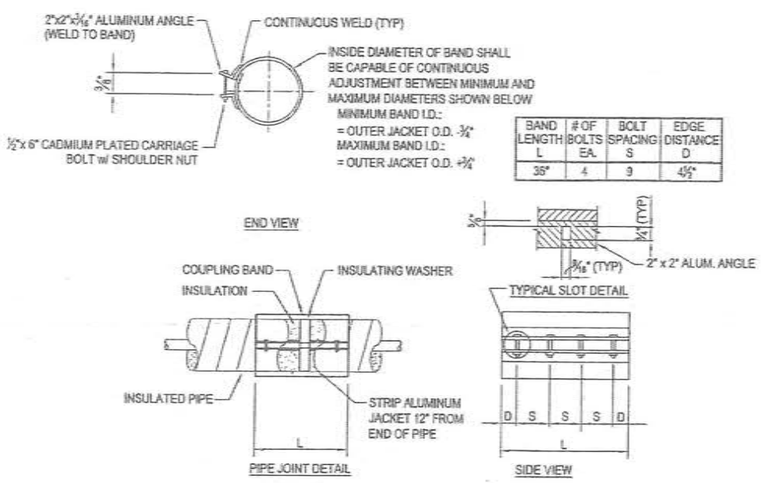

BAND LENGTH L	# OF BOLTS EA.	BOLT SPACING S	EDGE DISTANCE D
35"	4	9	4 1/2"

7 / C5.1 ARCTIC PIPE COUPLING BAND

NTS

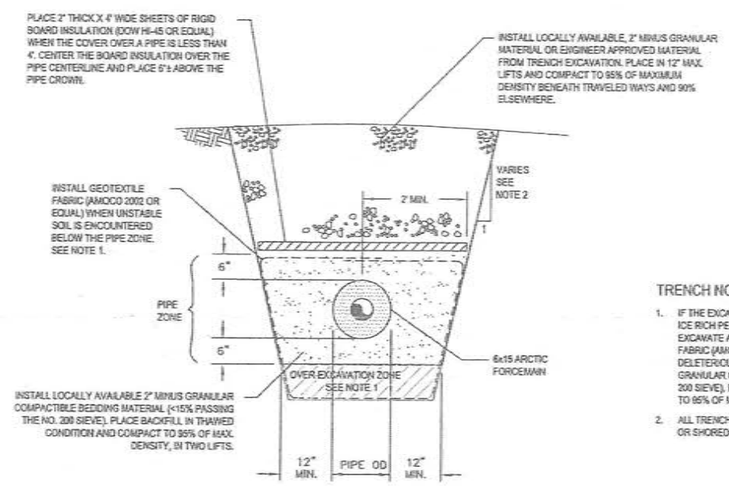

TRENCH NOTES:

1. IF THE EXCAVATION ENCOUNTERS ORGANICS, SILTS AND/OR ICE RICH PERMAFROST BENEATH THE PIPE ZONE, OVER EXCAVATE A MINIMUM OF 12" AND INSTALL GEOTEXTILE FABRIC (AMOCO 2002 OR EQUAL) AS SHOWN. REPLACE THE DELETERIOUS MATERIAL WITH LOCALLY AVAILABLE 2" MINUS GRANULAR COMPACTIBLE FILL (WITH <15% PASSING THE NO. 200 SIEVE). PLACE FILL IN THAWED CONDITION AND COMPACT TO 95% OF MAXIMUM MODIFIED PROCTOR DRY DENSITY.
2. ALL TRENCHES AND OTHER EXCAVATIONS SHALL BE SLOPED OR SHORED IN ACCORDANCE WITH OSHA STANDARDS.

A / C5.1 TYPICAL TRENCH SECTION FOR PIPE INSTALLED BENEATH PROPOSED ACCESS ROAD

NTS

RECORD DRAWING CERTIFICATE

THESE DRAWINGS REFLECT RECORDED INFORMATION OBTAINED DURING CONSTRUCTION. INFORMATION PROVIDED HEREIN IS ACCURATE TO THE BEST OF MY KNOWLEDGE.

NAME _____ DATE _____

SCALE: AS SHOWN

IF NOT ONE INCH ON THIS SHEET, ADJUST SCALES ACCORDINGLY

2010-11 WASTEWATER SYSTEM IMPROVEMENTS

ARCTIC PIPE DETAILS

TULUKSAK, ALASKA

CE2 ENGINEERS, INC.

PO BOX 220646 ANCHORAGE, AK 99520 PH: 907-349-1010 FAX: 907-349-1015

REVISION	BY	DATE

Project No. _____ Date JUNE 2009

Designed LAP

Drawn DDR

Approved LAP

Sheet No. C5.1

G:\ACAD\TULUKSAK\TLT0901 2008 Waste water disposal area\C5.1 ARCTIC PIPE DETAILS.dwg, 1/11/2011 1:44:01 PM, Flash, LANIER MP C2050_LD520C PCL 6BLK WHIT.pc3

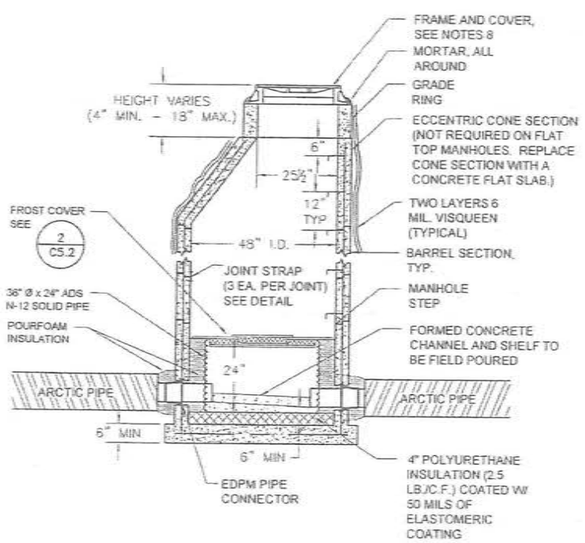

1 C5.2 MANHOLE DETAILS
SCALE: NTS

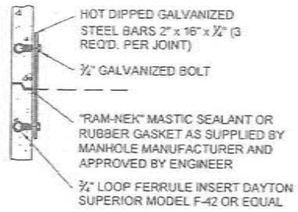

JOINT STRAPPING DETAIL

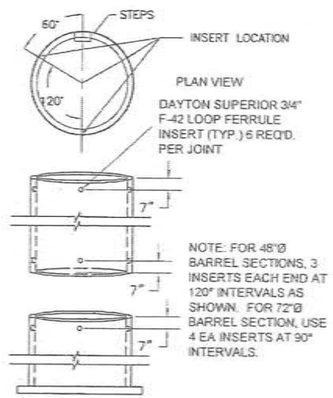

FERRULE INSERT LOCATIONS

SANITARY MANHOLE NOTES:

1. PRECAST MANHOLE SECTIONS SHALL BE REINFORCED CONCRETE CONFORMING TO ASTM C-478.
2. THE MANHOLE BASE SHALL BE INTEGRALLY CAST WITH THE BOTTOM BARREL SECTION.
3. RAM-NEK SEALANT OR ENGINEER APPROVED RUBBER GASKET AS SUPPLIED FROM MANHOLE MANUFACTURER SHALL BE INSTALLED AT ALL PRECAST JOINTS.
4. LOOP FERRULE INSERTS AND JOINT STRAPS SHALL BE PROVIDED AS SHOWN ON THE DETAIL.
5. EDPM PIPE CONNECTORS (Z-LOCK OR EQUAL) SHALL BE INSTALLED AT ALL PIPE PENETRATIONS.
6. PIPES PENETRATING THE MANHOLE SHALL EXTEND 3 INCHES INTO THE MANHOLE.
7. FOR MANHOLE HEIGHTS LESS THAN 6 FEET, SUBSTITUTE A PRECAST REINFORCED CONCRETE FLAT SLAB TOP FOR THE ECCENTRIC CONE SECTION.
8. MANHOLE RING, CATCH PAN AND SOLID COVER MARKED "SEWER" SHALL MEET ALASKA DEPARTMENT OF TRANSPORTATION STANDARD SPECIFICATION (IFCO 740 OR EQUAL).
9. MANHOLE STEPS SHALL BE CAST IN PLACE, AND SHALL BE ½" GRADE 60 STEEL REINFORCEMENT DIPPED IN COPOLYMER POLYPROPYLENE PLASTIC.
10. MANHOLE SHALL BE WRAPPED WITH 2 LAYERS OF 6 MIL VISQUEEN PRIOR TO BACKFILL.
11. TOP OF CASTING (T.O.C.) ELEVATION:
    (a) GRAVEL ROAD SURFACE - 6" BELOW FINAL GRADE.
    (b) PAVED ROAD SURFACE - INSTALL TOP OF COVER ½" BELOW SURFACE OF ASPHALT.
    (c) OFF ROADS AND TRAVELED WAY - INSTALL TOP 6" ABOVE FINAL GRADE.

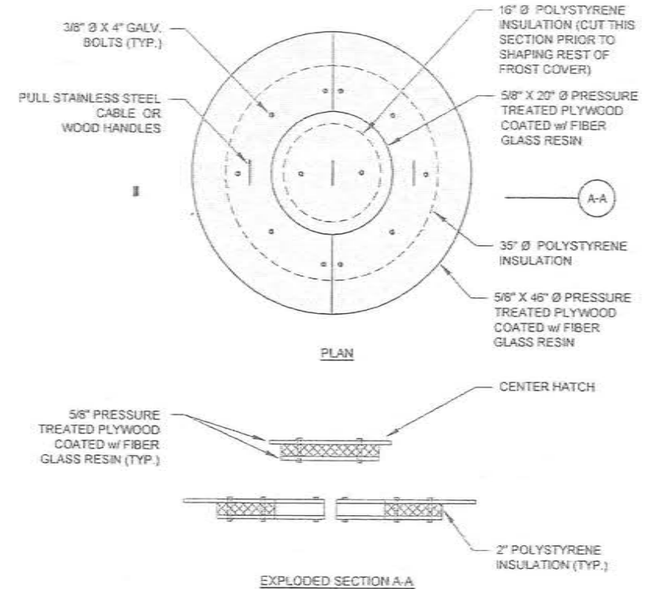

2 C5.2 MANHOLE FROST COVER DETAILS
SCALE: NTS

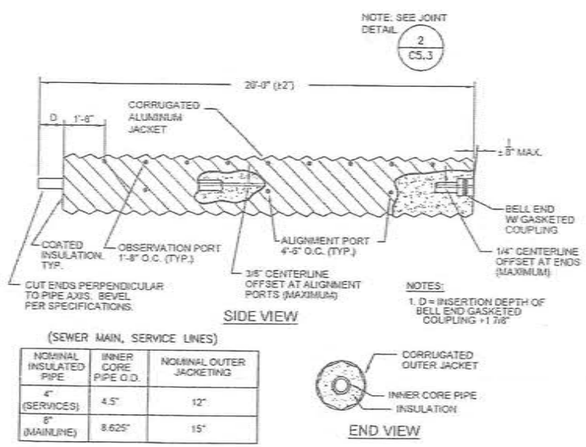

(SEWER MAIN, SERVICE LINES)

NOMINAL INSULATED PIPE	INNER CORE PIPE O.D.	NOMINAL OUTER JACKETING
4" (SERVICES)	4.5"	12"
8" (MAINLINE)	8.625"	15"

INNER CORE PIPE / OUTER JACKET SCHEDULE

3 C5.2 HDPE SEWER MAIN ALUMINUM JACKET
SCALE: NTS

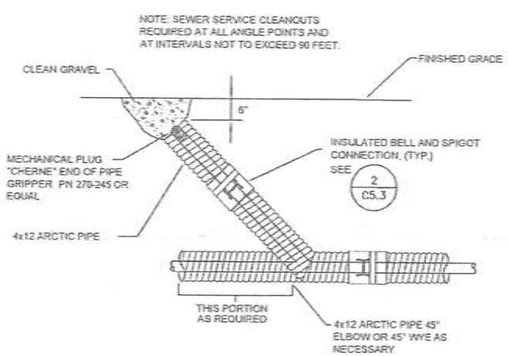

4 C5.2 SEWER SERVICE CLEANOUT
SCALE: NTS

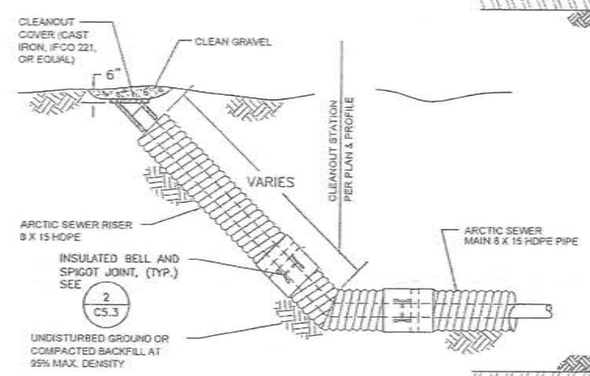

5 C5.2 SEWER MAIN CLEANOUT
SCALE: NTS

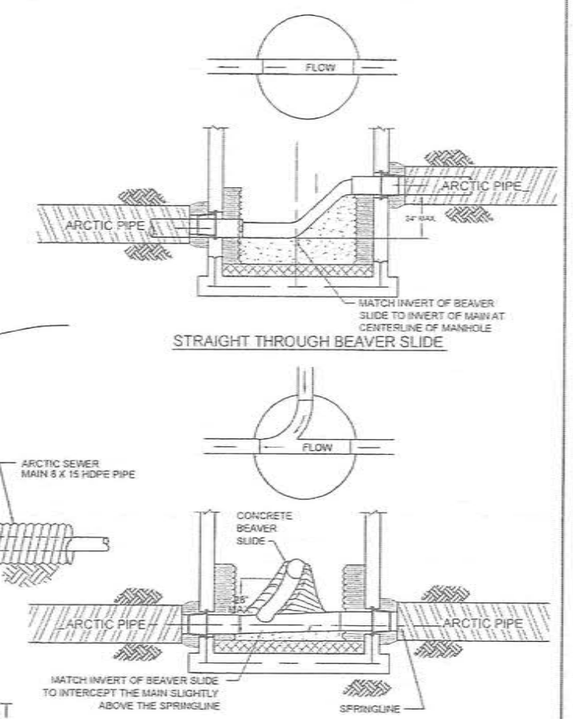

6 C5.2 BEAVER SLIDE
SCALE: NTS

RECORD DRAWING CERTIFICATE
THESE DRAWINGS REFLECT RECORDED INFORMATION OBTAINED DURING CONSTRUCTION. INFORMATION PROVIDED HEREIN IS ACCURATE TO THE BEST OF MY KNOWLEDGE.
NAME _____ DATE _____

SCALE: AS SHOWN

2010-11 WASTEWATER SYSTEM IMPROVEMENTS

SEWER MAIN AND MANHOLE DETAILS

TULUKSAK, ALASKA

CE2 ENGINEERS, INC.
PO BOX 230948 ANCHORAGE, AK 99523 PH: 907-349-1010 FAX: 907-349-1014

REVISION	BY	DATE

Project No. _____ Date JUNE 2009
Designed JPK
Drawn LAM
Approved LAP

Sheet No. C5.2

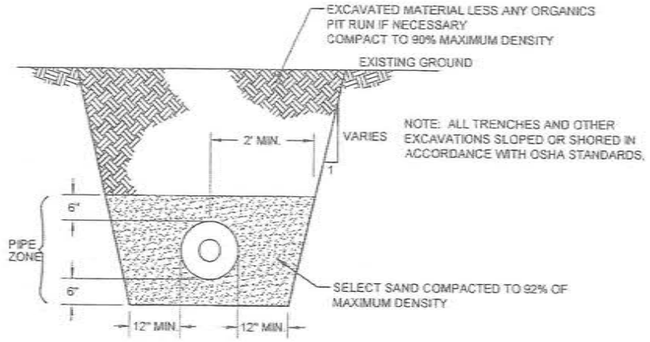

1 C5.3 TYPICAL TRENCH SECTION IN THAWED AND THAW STABLE GROUND
SCALE: NTS

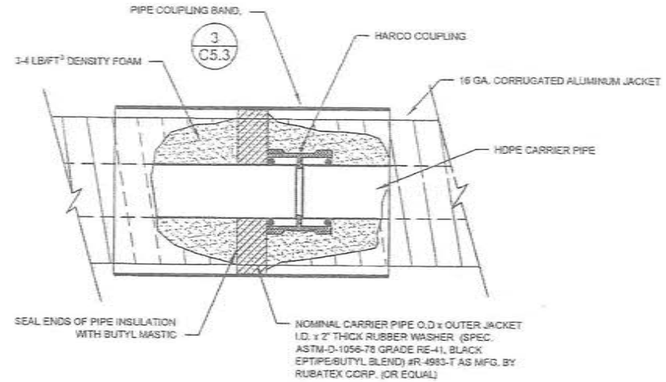

2 C5.3 GRAVITY SEWER JOINT ENCASEMENT DETAIL
SCALE: NTS

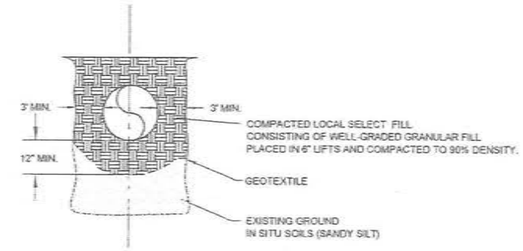

SECTION AA

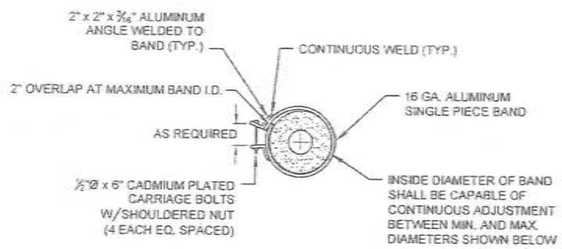

NOM. JACKET SIZE	ACTUAL JACKET SIZE (O.D.)	INSIDE DIAMETER MIN.	INSIDE DIAMETER MAX.
12"	12 7/8"	12 3/4"	13 5/8"
15'	15 7/8"	15 3/4"	16 5/8"
16"	16 7/8"	16 3/4"	17 5/8"
18"	18 7/8"	18 3/4"	20"
21"	20 7/8"	20 3/4"	22"

END VIEW

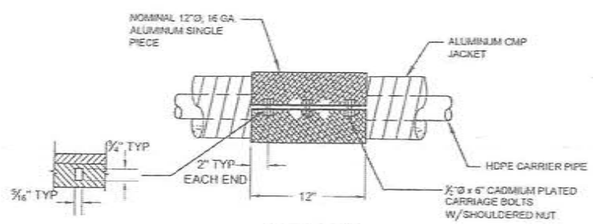

TYPICAL SLOT DETAIL

SIDE VIEW

3 C5.3 GRAVITY SEWER ARCTIC PIPE COUPLING BAND DETAIL
SCALE: NTS

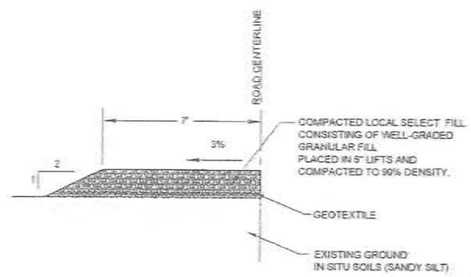

5 C5.3 ROAD CROSS SECTION
SCALE: NTS

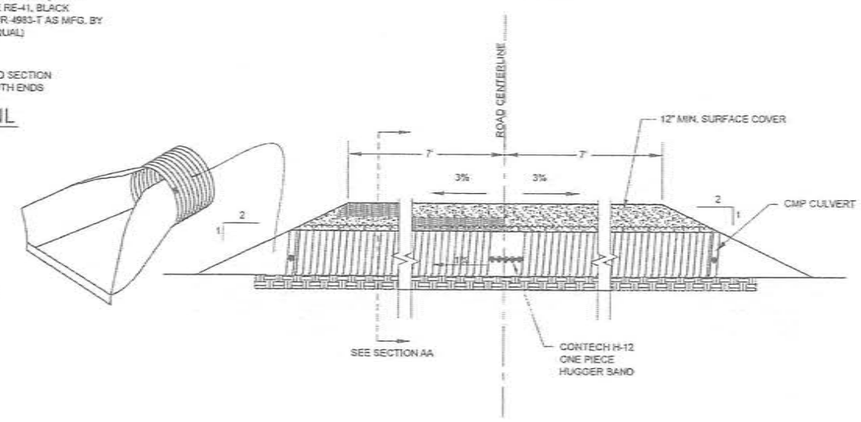

6 C5.3 ROAD AND CULVERT
SCALE: NTS

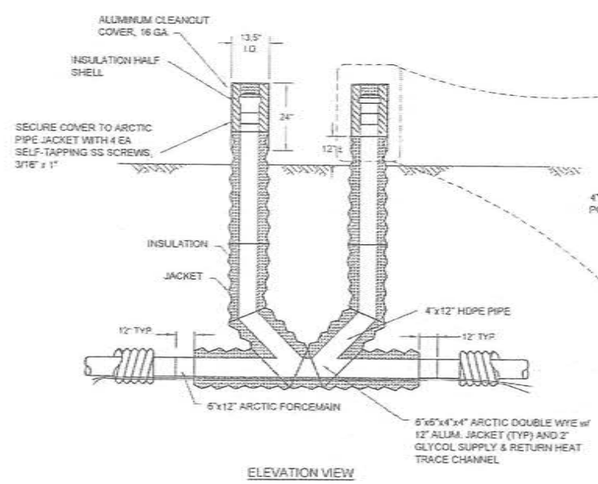

ELEVATION VIEW

4 C5.3 6X15 ARCTIC PIPE DOUBLE WYE CLEANOUT DETAIL
SCALE: NTS

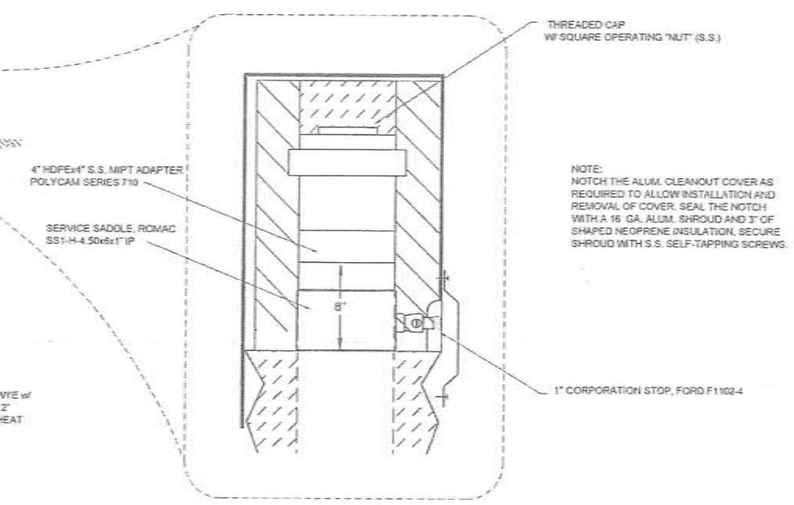

NOTE:
NOTCH THE ALUM. CLEANOUT COVER AS REQUIRED TO ALLOW INSTALLATION AND REMOVAL OF COVER. SEAL THE NOTCH WITH A 16 GA. ALUM. SHROUD AND 3" OF SHAPED NEOPRENE INSULATION. SECURE SHROUD WITH S.S. SELF-TAPPING SCREWS.

MANUAL AIR RELEASE DETAIL
(UPSTREAM SIDE ONLY)

RECORD DRAWING CERTIFICATE
THESE DRAWINGS REFLECT RECORDED INFORMATION OBTAINED DURING CONSTRUCTION. INFORMATION PROVIDED HEREIN IS ACCURATE TO THE BEST OF MY KNOWLEDGE.
NAME ____ DATE ____

SCALE: AS SHOWN

2010-11 WASTEWATER SYSTEM IMPROVEMENTS

TRENCH AND SEWER CONNECTION DETAILS

TULUKSAK, ALASKA

CE2 ENGINEERS, INC.
PO BOX 223544 ANCHORAGE, AK 99522 PH: 907-349-1019 FAX: 907-349-1015

REVISION	BY	DATE

Project No. ____ Date JUNE 2009
Designed PCW
Drawn DDR
Approved PCW

Sheet No. C5.3

G:\ACAD\TULUKSAK\TL70901 2008 Waste water disposal area\C5.3 TRENCH & SEWER PIPE CONNECTION DETAILS.dwg, 1/11/2011 1:47:33 PM, Flash, LANIER MP C2050_LD520C PCL 6BLK WHIT.pc3

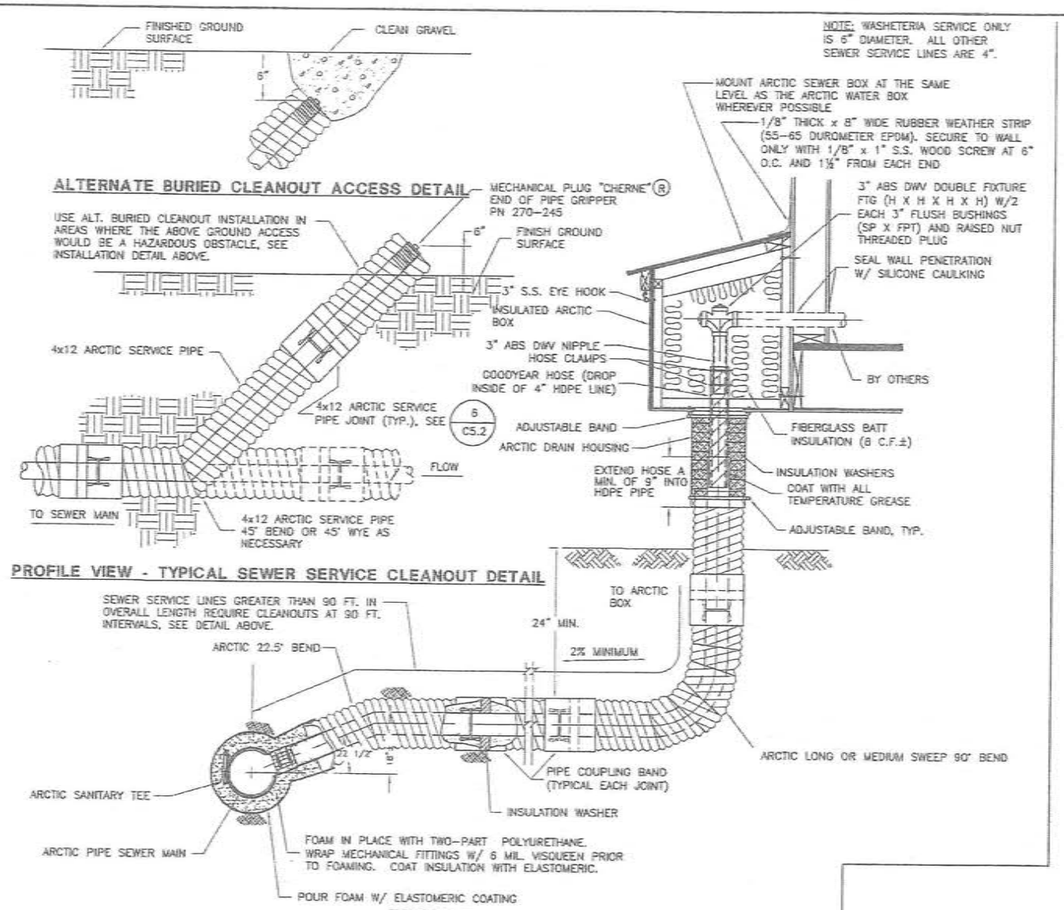

BILL OF MATERIALS (SEWER SERVICE)

ARCTIC 11 1/4° OR ARCTIC 22 1/2° BEND	NOMINAL 4 X 12 OR 6 X 12 PRE-INSULATED HDPE 22 ½° OR 11 ¼° BEND, IPS, SDR 17, 16 GA. CORRUGATED ALUMINUM JACKET, PUSH ON COUPLING X BEVELED END.
ARCTIC SERVICE LINE	NOMINAL 4 X 12 OR 6 X 12 PRE-INSULATED HDPE, IPS, SDR 17, 16 GA. CORRUGATED ALUMINUM JACKET, 20 FT. LENGTHS, PUSH ON COUPLING X BEVELED END.
INSULATION WASHER	NOMINAL 4 X 12 OR 6 X 12 RUBBER WASHER, 4.75" I.D.X 12" O.D.X 2" THICK (SPEC. ASTM-D-1056-85 GRADE 2A1 BLACK EPT/PE/BUTYL BLEND).
PIPE COUPLING BAND	NOMINAL 12", 16 GA. ALUMINUM, SINGLE PIECE, 3 BOLT BAND X 12" LONG.
ARCTIC LONG SWEEP 90° BEND	NOMINAL 4 X 12 OR 6 X 12 PRE-INSULATED HDPE, SDR 17, 90° LONG SWEEP (30" BEND RADIUS), 16 GA. CORRUGATED ALUMINUM JACKET, PUSH ON COUPLING X BEVELED END.
ARCTIC DRAIN HOUSING	FERNCO ADH-13, 13" DIAMETER X 29" LONG ARCTIC DRAIN HOUSING WITH 8 BOLT UPPER RING 7/16" HOLES; FERNCO INC., DAVISON, MI (800-521-1283).
GOODYEAR HOSE	GOODYEAR "HI-MILER" STR RADIATOR HOSE, P/N 57256, FLEXTEN SAE 20 RI DI , 3.50" I.D.; 3.90" O.D. FITS INSIDE 4" HDPE, SDR 17. FOR 6" SERVICE TO THE WATER TREATMENT PLANT/WASHETERIA USE A STRAIGHT MISSION PN MR56 66 ARC REINFORCED COUPLING.
INSULATED ARCTIC BOX	INSULATED PLYWOOD ARCTIC BOX WITH HINGED LID AND REMOVABLE FRONT PANEL. FABRICATE TO CE2 ENGINEERS STANDARD DETAIL. APPROXIMATE SIZE = 8 C.F..
PLUMBING	3" OR 6" ABS - DWV PIPE ASTM D1788 & D2661.
HOSE CLAMPS AND ADJUSTABLE BAND	STAINLESS STEEL, 1/2" WIDE, ADJUSTABLE.
POUR FOAM	2 COMPONENT URETHANE FOAM, 2.5 LB./C.F. DENSITY.
ELASTOMERIC COATING	APPLY 50 MILS. DURATHANE ELASTOMERIC RESIN COATING AS FURNISHED BY URETHANE CONTRACTORS SUPPLY CORP., ANCHORAGE.

1 / C5.4 TYPICAL SEWER SERVICE CONNECTION TO MAIN

NTS

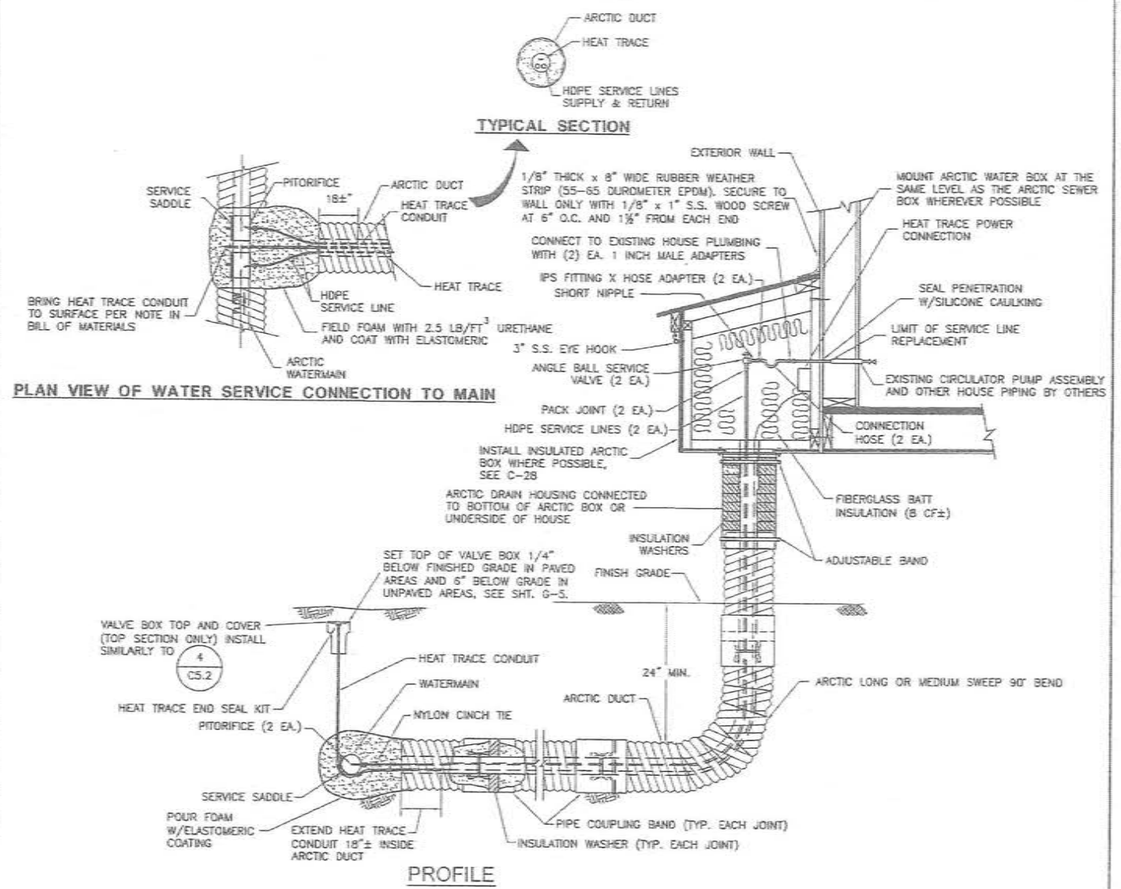

BILL OF MATERIALS (WATER SERVICE)

SERVICE SADDLE	ROMAC SS1-H (ACTUAL WATER MAIN ODO X LENGTH X TAP SIZE (NORMALLY 1" IP). STAINLESS STEEL, 2 BOLT (MIN.) SERVICE SADDLE. PROVIDE 4 EA. SS SPRING WASHERS PER BOLT.
PITORIFICE	1" FORD PITORIFICE CORPORATION STOP F1102-4-P WITH 1" IP THREAD X 1" PACK JOINT FOR PVC SIZE HDPE (1" SDR 11 MEETING ASTM D-3035). PROVIDE SS INSERT STIFFENER (FORD INSERT NO. 53-72 OR MUELLER NO. 504-385) AND PITORIFICE STINGER FOR INSERTION IN 8"ø MAINLINE.
HDPE SERVICE LINE	1"ø HDPE (PE 3408), SDR 11, 160 PSI MIN., NSF 61 APPROVED, MEETING ID ASTM D-3035
ARCTIC DUCT	NOMINAL 4" X 12" PRE-INSULATED HDPE, IPS, SDR 17, 16 GA. CORRUGATED ALUMINUM JACKET, PUSH ON COUPLING X BEVELED END.
INSULATION WASHER	NOMINAL 4 X 12 RUBBER WASHER, 4.75" I.D.X 12" O.D.X 2" THICK (SPEC. ASTM-D-1056-85 GRADE 2A1 BLACK EPT/PE/BUTYL BLEND).
PIPE COUPLING BAND	NOMINAL 12", 16 GA. ALUMINUM, SINGLE PIECE, 3 BOLT BAND
ARCTIC LONG SWEEP 90° BEND	NOMINAL 4" X 12" PRE-INSULATED HDPE, SDR 17, 90° LONG SWEEP (30" BEND RADIUS), 16 GA. CORRUGATED ALUMINUM JACKET, PUSH ON COUPLING X BEVELED END.
ARCTIC DRAIN HOUSING	FERNCO ADH-13, 13" DIAMETER X 29" LONG ARCTIC DRAIN HOUSING WITH 8 BOLT UPPER RING 7/16" HOLES; FERNCO INC., DAVISON, MI (800-521-1283).
PACK JOINT COMPRESSION CONNECTOR	1" PVC PACK JOINT X 1" MIP (FORD C87-44) WITH INSERT STIFFENER (FORD NO. 53-72).
ANGLE BALL SERVICE VALVE	1" FORD ANGLE BALL VALVE. BA11-344W, W/PADLOCK WINGS, 1" FIPT X FIPT.
SHORT NIPPLE	1" DIAMETER CLOSE BRASS NIPPLE
CONNECTION HOSE	1" I.D. NSF APPROVED POTABLE WATER HOSE X 12"± LONG (FIELD CUT TO FIT) BOTH ENDS SHALL BE FITTED W/ BRASS LONG SHANK RIBBED INSERT (DIXON BLS 848 OR EQUAL) X 1" FIPT SWIVEL FITTINGS W/ GASKETS. INSERT FITTINGS SHALL BE SECURED W/ 2 EA. STAINLESS STEEL ADJUSTABLE CLAMPS PER FITTING. ASSEMBLY SHALL BE RATED AT 150 PSI MINIMUM.
ADJUSTABLE BANDS	STAINLESS STEEL, 1/2" WIDE, ADJUSTABLE.
POUR FOAM	2 COMPONENT, 2.5 LBS/FT POLYURETHANE FOAM.
ELASTOMERIC COATING	APPLY 50 MILS DURATHANE ELASTOMERIC RESIN COATING AS FURNISHED BY URETHANE CONTRACTORS SUPPLY CORP., ANCHORAGE (907-276-7932).
HEAT TRACE	5 W/FT, SELF LIMITING HEAT TRACE.
HEAT TRACE CONNECTION KIT AND END SEAL KIT	USE MANUFACTURER'S RECOMMENDED HEAT TRACE END SEAL FOR BELOW GROUND CONDITIONS.
HEAT TRACE CONDUIT AND TERMINATION ENCLOSURE	1" HDPE, SDR 11 CONDUIT. ROUTE FROM 18" INSIDE OF SERVICE LINE DUCT, BENEATH SERVICE SADDLE TO BOTTOM OF VALVE BOX COVER. USE 1" GALVANIZED "KING NIPPLE" W/ PIPE CAP & 1" SS HOSE CLAMP.
VALVE BOX AND COVER	5" I.D X 9" LONG VALVE BOX. ADJUSTING SLEEVE AND COVER MARKED "H.T.", IFCO PN 2051 OR EQUAL.
INSULATED ARCTIC BOX	INSULATED PLYWOOD ARCTIC BOX WITH HINGED LID AND REMOVABLE FRONT PANEL. FABRICATE TO CE2 STANDARD DETAIL. APPROXIMATE SIZE = 8 C.F.
RUBBER WEATHER STRIP	1/8" THICK x 8" WIDE RUBBER WEATHER STRIP (55-65 DUROMETER EPDM). SECURE TO WALL ONLY WITH 1/8" x 1" S.S. WOOD SCREW AT 6" O.C. AND 1½" FROM EACH END

2 / C5.4 TYPICAL WATER SERVICE CONNECTION TO MAIN

NTS

RECORD DRAWING CERTIFICATE
THESE DRAWINGS REFLECT RECORDED INFORMATION OBTAINED DURING CONSTRUCTION. INFORMATION PROVIDED HEREIN IS ACCURATE TO THE BEST OF MY KNOWLEDGE.
NAME ____ DATE ____

SCALE: AS SHOWN

2010-11 WASTEWATER SYSTEM IMPROVEMENTS

SEWER SERVICE LINE DETAILS

TULUKSAK, ALASKA

CE2 ENGINEERS, INC.
PO BOX 220646 ANCHORAGE, AK 99523 PH: 907-349-1010 FAX: 907-349-1015

REVISION	BY	DATE
LAGOON RELOCATION	LP	8/10

Project No. ____
Date JUNE 2009
Designed LAP
Drawn JDJ
Approved LAP

Sheet No. C5.4

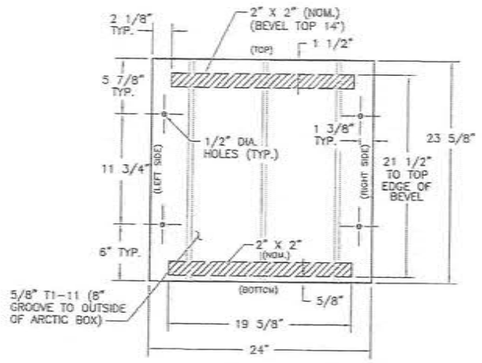

FRONT PANEL

(VIEW FROM OUTSIDE)
SCALE: 1 1/2" = 1'

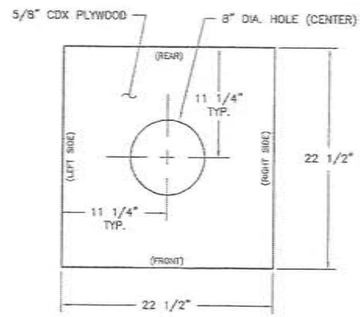

BOTTOM

(VIEW FROM ABOVE)
SCALE: 1 1/2" = 1'

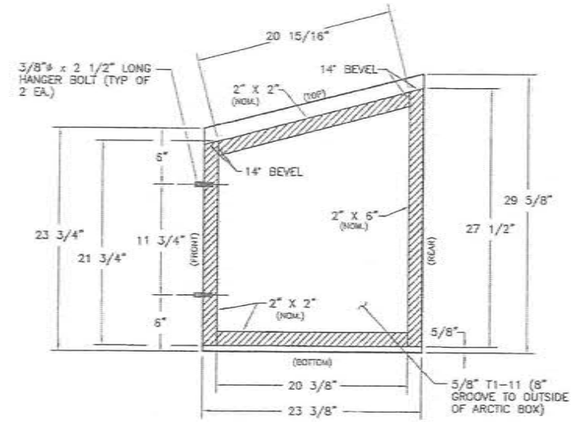

LEFT SIDE

(VIEW FROM INSIDE)
SCALE: 1 1/2" = 1'

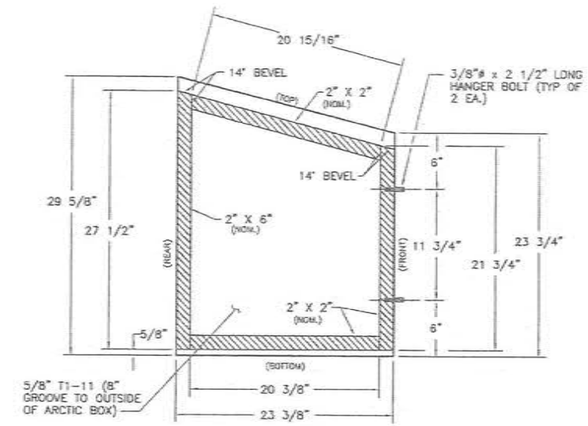

RIGHT SIDE

(VIEW FROM INSIDE)
SCALE: 1 1/2" = 1'

GENERAL NOTES:

1. ALL "2x" MATERIAL SHALL BE GRADE #2 OR BETTER.
2. FLAWED CONSTRUCTION MATERIAL SHALL NOT BE USED IN ARCTIC BOX CONSTRUCTION. FLAWED MATERIAL INCLUDES LARGE KNOTS, CRACKS, CHECKS, DELAMINATIONS, AND SPLITS CAUSED DURING ASSEMBLY.
3. ALL "2X" MATERIAL SHALL BE FASTENED TO PLYWOOD AND T1-11 WITH #6 X 1 5/8" DECK SCREWS OR 1 1/2" LONG 16 GA. STAPLES AT 4" O.C.

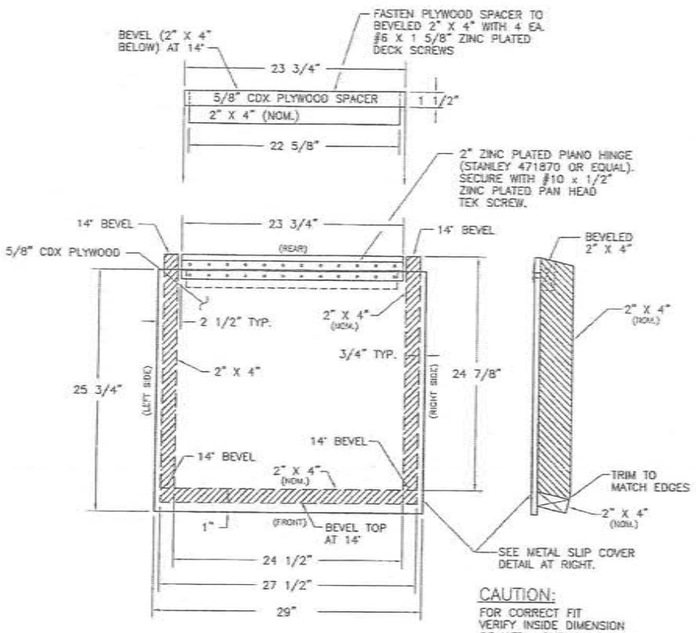

TOP

(VIEW FROM ABOVE)
SCALE: 1 1/2" = 1'

CAUTION:
FOR CORRECT FIT VERIFY INSIDE DIMENSION OF METAL SLIP COVER LID PRIOR TO CUTTING PLYWOOD TOP.

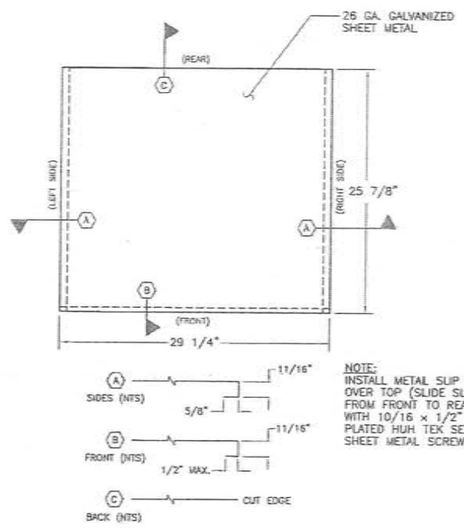

NOTE:
INSTALL METAL SLIP COVER OVER TOP (SLIDE SLIP COVER FROM FRONT TO REAR). SECURE WITH 10/16 x 1/2" LONG, ZINC PLATED HUH TEK SELF TAPPING SHEET METAL SCREWS, 6" O.C.

METAL SLIP COVER

(VIEW FROM ABOVE)
SCALE: 1 1/2" = 1'

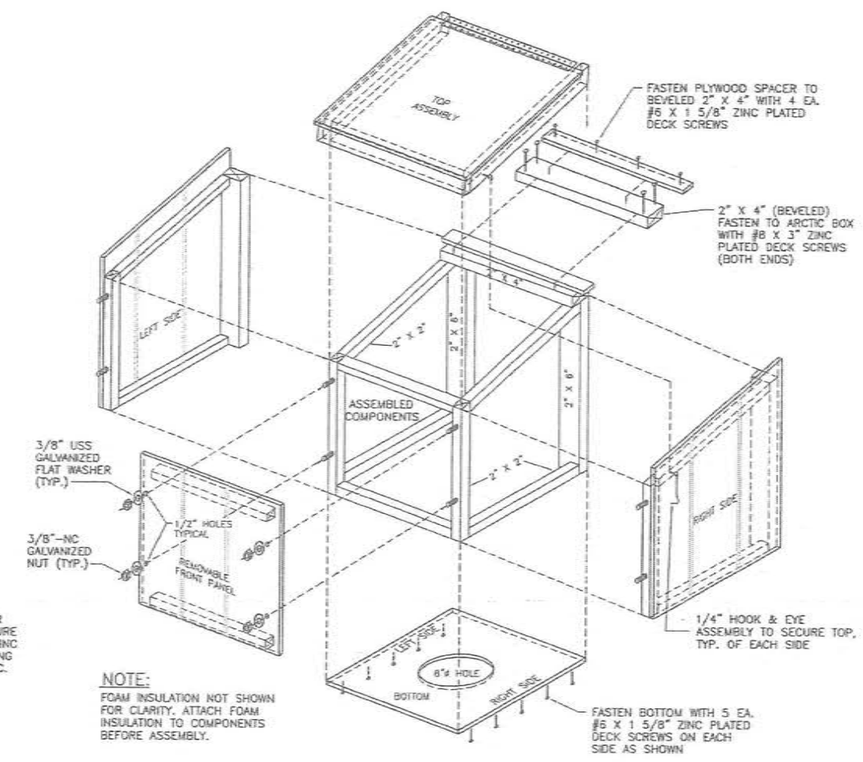

NOTE:
FOAM INSULATION NOT SHOWN FOR CLARITY. ATTACH FOAM INSULATION TO COMPONENTS BEFORE ASSEMBLY.

ARCTIC BOX ASSEMBLY DIAGRAM

NOT TO SCALE

RECORD DRAWING CERTIFICATE
THESE DRAWINGS REFLECT RECORDED INFORMATION OBTAINED DURING CONSTRUCTION. INFORMATION PROVIDED HEREIN IS ACCURATE TO THE BEST OF MY KNOWLEDGE.
NAME _____ DATE _____

SCALE: AS SHOWN

2010-11 WASTEWATER SYSTEM IMPROVEMENTS

ARCTIC BOX DETAILS

TULUKSAK, ALASKA

CE2 ENGINEERS, INC.
PO BOX 223044 ANCHORAGE, AK 99522 PH: 907-349-1010 FAX: 907-349-1015

REVISION	BY	DATE
LAGOON RELOCATION	LP	8/10

Project No. _____
Date JUNE 2009
Designed JDJ
Drawn JDJ
Approved LAP

Sheet No. C5.5

G:\ACAD\TULUKSAK\TLT0901 2008 Waste water disposal area\C5.5 ARCTIC BOX DETAILS.dwg, 1/11/2011 1:46:45 PM, Plash, LANIER MP C2050_LD520C PCL 6BUK WHIT.pc3

NOTE:

ALL FOAM INSULATION SHALL BE SECURELY GLUED TO THE INSIDE FACE OF THE T1-11 ARCTIC BOX WITH FOAM-PLYWOOD ADHESIVE (LIQUID NAILS LN 603) TYPICAL.

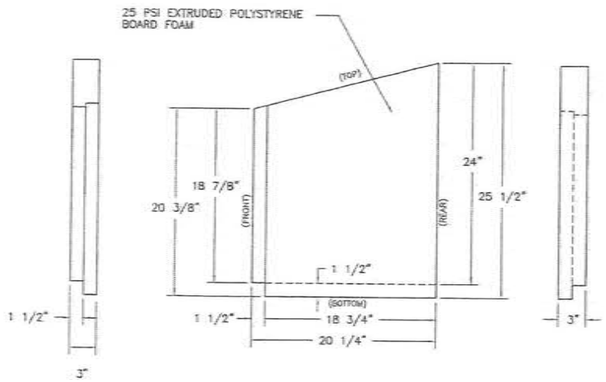

LEFT SIDE FOAM

(VIEW FROM INSIDE ARCTIC BOX)
SCALE: 1 1/2" = 1'

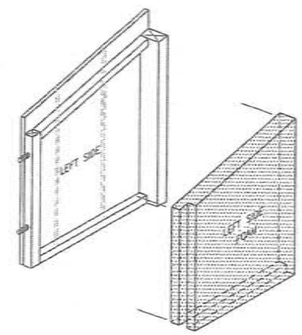

LEFT SIDE ASSEMBLY

NOT TO SCALE

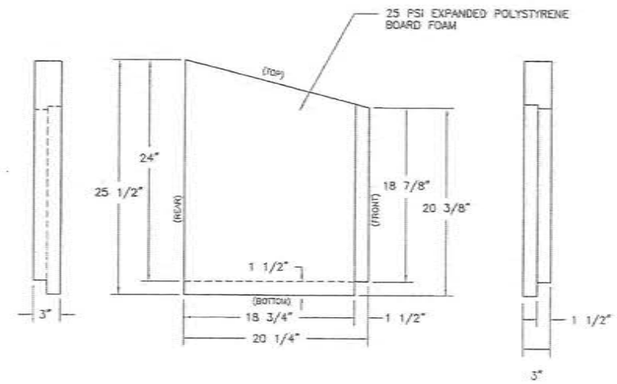

RIGHT SIDE FOAM

(VIEW FROM INSIDE ARCTIC BOX)
SCALE: 1 1/2" = 1'

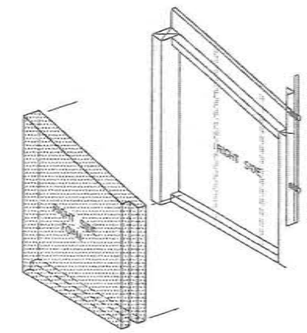

RIGHT SIDE ASSEMBLY

NOT TO SCALE

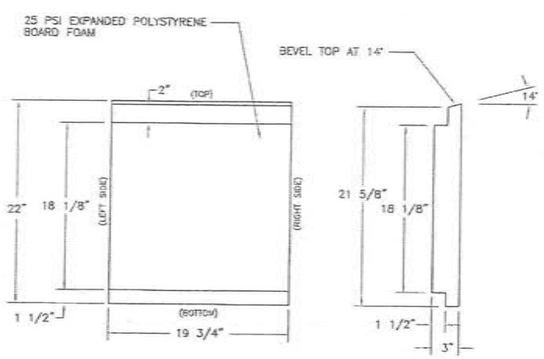

FRONT PANEL FOAM

SCALE: 1 1/2" = 1'

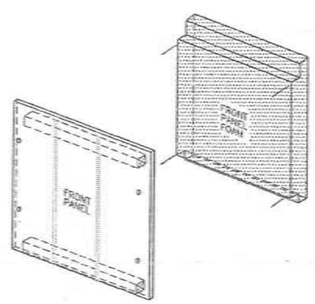

FRONT PANEL ASSEMBLY

NOT TO SCALE

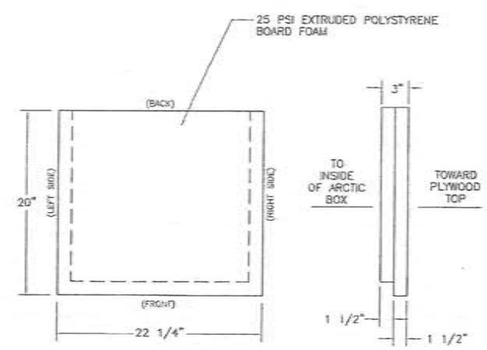

TOP FOAM

(VIEW FROM ABOVE)
SCALE: 1 1/2" = 1'

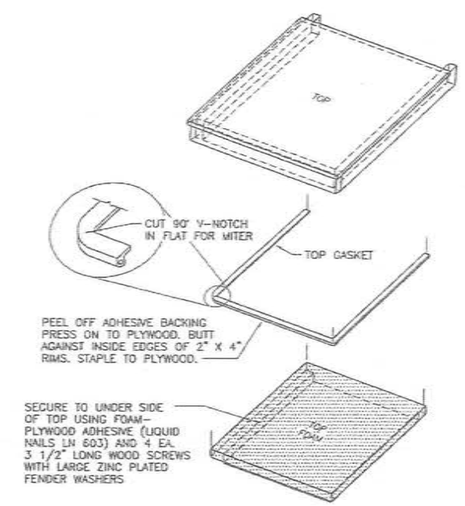

TOP ASSEMBLY

NOT TO SCALE

RECORD DRAWING CERTIFICATE

THESE DRAWINGS REFLECT RECORDED INFORMATION OBTAINED DURING CONSTRUCTION. INFORMATION PROVIDED HEREIN IS ACCURATE TO THE BEST OF MY KNOWLEDGE.

NAME _____ DATE _____

SCALE: AS SHOWN

BAR IS ONE INCH ON ORIGINAL DRAWING

0 1"

IF NOT ONE INCH ON THIS SHEET, ADJUST SCALES ACCORDINGLY

WILLOW SAFE WATER ALASKA

STATE OF ALASKA 49TH JOHN A. FITCH JR. 11181 PROFESSIONAL ENGINEER

2010-11 WASTEWATER SYSTEM IMPROVEMENTS

ARCTIC BOX DETAILS

TULUKSAK, ALASKA

CE2 ENGINEERS, INC.
PO BOX 230948 ANCHORAGE, AK 99523 PH: 907-349-1010 FAX: 907-349-1015

REVISION	BY	DATE
LAGOON RELOCATION	LP	8/10

Project No. _____
Date JUNE 2009
Designed JDJ
Drawn JDJ
Approved LAP

Sheet No. C5.6

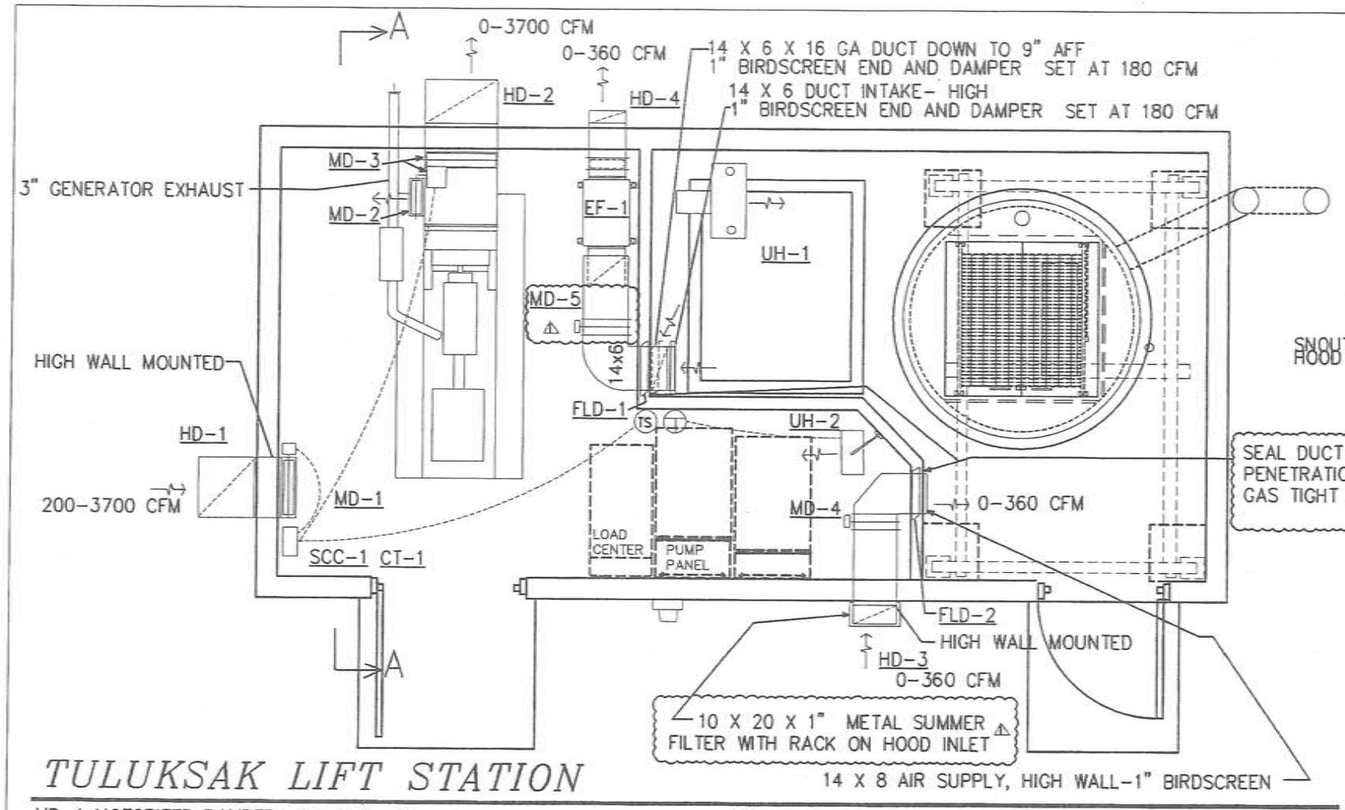

TULUKSAK LIFT STATION

SCALE: 1/4"=1'-0"

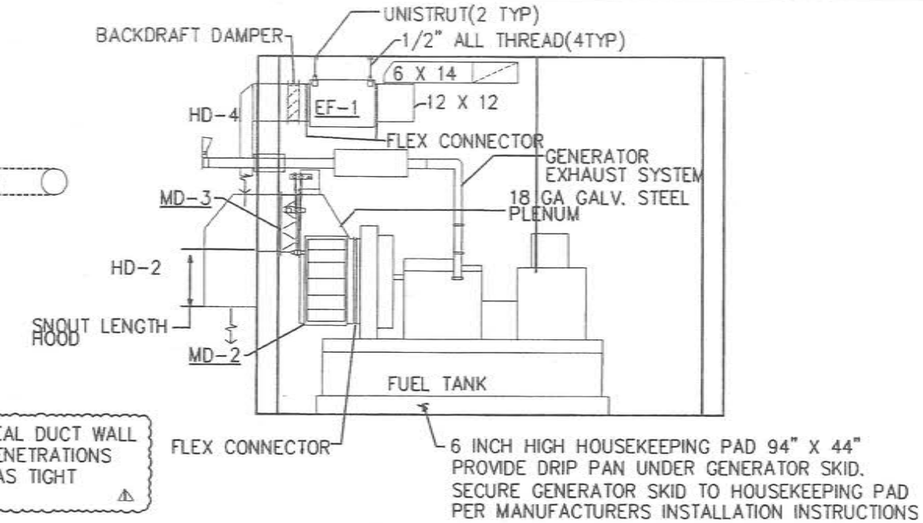

SECTION A-A

SCALE: 1/4"=1'-0"

SCC-1 CONTROLLER FOR MD-1 DAMPER MOTOR, MD-2, MD-3 DAMPER MOTOR:
2 INPUTS: START-STOP CONTROL, ANALOG ROOM TEMPERATURE
2 OUTPUTS: RELAY CONTROL OPEN CLOSE MD-1 MODULATE 4-20 MA MD-2,3 DAMPER CONTROL SIGNAL
MFG: HONEYWELL T775M2006 WITH C7130B1009 ROOM SENSOR

MD-1 MOTORIZED DAMPER 24 WIDE X 16 HIGH. LOW LEAKAGE, 3 POSITION DAMPER
MFG: RUSKIN CD-50 DAMPER WITH BELIMO AF24 W/ZDB-AF2 SPRING RETURN ACTUATOR 24 VAC 5 VA
SUMMER FILTER: 16 X 25 X 1 AAF 316-001-600 OR EQUAL
MD-2 MOTORIZED DAMPER 12" WIDE X 26" HIGH. LOW LEAKAGE, VARIABLE POSITION DAMPER
MFG: DAMPER: RUSKIN CD-50 WITH COMMON OPERATOR WITH MD-3
MD-3 MOTORIZED DAMPER 24" WIDE X 18" HIGH. LOW LEAKAGE, VARIABLE POSITION DAMPER
MFG: RUSKIN CD-50 DAMPER WITH HONEYWELL M9185E MOTOR W/4074 EDC MODULE 24 VAC 24 VA
PROVIDE CRANK ARMS, RODS, AND FITTINGS TO EFFECT 2 DAMPER CONTROL
MD-4 MOTORIZED DAMPER 14" WIDE X 8" HIGH. LOW LEAKAGE, TWO POSITION DAMPER
MFG:RUSKIN CD-50 DAMPER WITH BELIMO AF24 W/ZDB-AF2 SPRING RETURN ACTUATOR 24 VAC 5 VA
MD-5 MOTORIZED DAMPER 14" WIDE X 6" HIGH. LOW LEAKAGE, TWO POSITION DAMPER
MFG:RUSKIN CD-50 DAMPER WITH BELIMO AF24 W/ZDB-AF2 SPRING RETURN ACTUATOR 24 VAC 5 VA △1
SUMMER FILTER: 10 X 20 X 1 AAF 316-001-200 OR EQUAL
HD-1 INTAKE HOOD: 24" WIDE X 18" DEEP WITH 36 INCH SNOUT. 16 GA. GALVANIZED STEEL, 1" BIRDSCREEN, SEE DETAIL SHEET M1-2
HD-2 EXHAUST HOOD: 24" WIDE X 16" DEEP WITH 9 INCH SNOUT. 16 GA. GALVANIZED STEEL, 1" BIRDSCREEN, SEE DETAIL SHEET M1-2
HD-3 INTAKE HOOD: 14" WIDE X 8" DEEP WITH 18 INCH SNOUT. 16 GA. GALVANIZED STEEL, 1" BIRDSCREEN, SEE DETAIL SHEET M1-2
FLARE INTAKE OF HD-3 FOR 10x20 METAL FILTER w/ RACK FOR SUMMER FILTER
HD-4 EXHAUST HOOD: 12" WIDE X 5" DEEP WITH 16 INCH SNOUT. 16 GA. GALVANIZED STEEL, 1" BIRDSCREEN, SEE DETAIL SHEET M1-2
FLD-1 DYNAMIC FIRE DAMPER 14 X 6 MFG: RUSKIN DIBD2 OR EQUAL
FLD-2 DYNAMIC FIRE DAMPER 14 X 8 MFG: RUSKIN DIBD2 OR EQUAL

SEQUENCE OF OPERATION: LIFT STATION AREA
EF-1, MD-4, MD-5 OPERATION: EF-1, MD-4, MD-5 ARE INTERLOCKED. WHEN WALL SWITCH OUTSIDE △1 LIFT STATION DOOR IS SET TO "ON" EF-1 STARTS,MD-4 OPENS, MD-5 OPENS TO FULL OPEN. SWITCH ACTIVATES FLASHING RED LIGHT(LABELED "UNSAFE TO ENTER"). LIGHT IS ON FOR 5 MINUTES TO PURGE AREA AND AT THE END OF THE 5 MINUTE TIME A GREEN LIGHT (LABELED "MONITOR WET WELL ROOM WITH COMBUSTIBLE GAS DETECTOR PRIOR TO ENTRY"). WHEN OPERATOR LEAVES WORK AREA THE SWITCH IS SET TO "OFF" AND EF-1 STOPS & MD-5, MD-5 DAMPERS CLOSE.

CT-1 CONTROL TRANSFORMER: 120 V PRIMARY/ 24 VAC SECONDARY 60 VA MFG: HONEYWELL OR EQUAL
EF-1 EXHAUST FAN: INLINE TYPE, BELT DRIVE. 360 CFM@ 0.4 INCHES W.C., ALUMINUM HOUSING AND WHEEL STAINLESS STEEL FASTENERS, PERMATECTOR COATING, TOGGLE SWITCH, DUAL DRIVES, GRIP NOTCH BELTS SPRING HANGER ISOLATORS, GREASABLE BEARINGS WITH EXTENDED LUBE LINES, TEFC MOTOR, BACKDRAFT DAMPER, MOTOR COVER. MFG: GREENHECK BSQ 90-4 1/4 HP/115V/1 PH OR APPROVED EQUAL

GENERATOR: NOMINAL 40 KW 208/3 PH/60 HZ SEE ELECTRICAL FOR CONFIG: MFG: KOHLER 40REOZJC (VERIFY) WIDE SKID CONFIG, DIESEL ENGINE, 1530 LB, 113 GALLON INTEGRAL SKID FUEL TANK(14 HIGH X 90.5 L X 41 WIDE, GENERATOR EXHAUST: 355 CFM, GENERATOR RADIATOR AIR 3400 CFM, COMBUSTION AIR-130 CFM

GENERATOR EXHAUST SYSTEM:
PROVIDE 3 INCH STAINLESS STEEL EXHAUST SYSTEM WITH PIPE, FLEX CONNECTOR, WALL THIMBLE FOR WOOD FRAME WALL, CLAMPS, FITTINGS, FASTENERS, HANGERS, RESIDENTIAL MUFFLER, FLAPPER, WRAP EXHAUST WITH APPROVED BLANKET INSULATION. 3M 615-(1 WRAP) OR EQUAL

HOUSEKEEPING PAD: PROVIDE CONCRETE PAD AND DRIP PAN UNDER SKID.

UH-1: UNIT HEATER. 10 KW, 208 V, 3 PH. HANGING UNIT HEATER WITH PROPELLOR FAN EXPLOSION PROOF UNIT WITH BUILT IN SPACE THERMOSTAT. PROVIDE CEILING MOUNTING KIT
MFG: Q MARK GUX1000832 WITH SPACE T STAT. 29.2 AMPS, 840 CFM

UH-2: UNIT HEATER. 3 KW, 208/240 V, 1 PH. HANGING UNIT HEATER WITH PROPELLOR FAN PROVIDE WALL MOUNTING KIT, AND LOW VOLTAGE WALL THERMOSTAT.
MFG: Q MARK MUH 0321 11/12.5 AMPS, 350 CFM

SEQUENCE OF OPERATION: GENERATOR OPERATION
MD-1, MD-2, MD-3 OPERATION: OFF POSITION: MD-1 IS CLOSED, MD-2 IS FULL OPEN, MD-3 IS FULL CLOSED. GENERATOR IS STARTED: MD-1 OPENS, MD-2 BYPASSES AIR TO ROOM AND BEGINS TO MODULATE CLOSED WHILE MD-3 BEGINS TO OPEN. DAMPER MOTOR MODULATES TO ALLOW GENERATOR RADIATOR AIR TO HEAT ROOM ROOM SET POINT: 75 F. ON GENERATOR SHUT DOWN SYSTEM RETURNS TO OFF POSITION

SEQUENCE OF OPERATION: UNIT HEATERS UH-1, UH-2
UH-1 CYCLES ON BUILT IN THERMOSTAT: SET 50 F
UH-2 CYCLES ON ROOM THERMOSTAT: SET 55 F

△1 03-23-2011 REVISE DUCT WORK, MD-4, SEQUENCE OF OPERATION

CAPSTONE ENGINEERING LLC
MECHANICAL ENGINEERS
12110 BUSINESS BLVD. STE 6, PMB 169
EAGLE RIVER, ALASKA 99577
TELEPHONE & FAX 541-884-8065

STATE OF ALASKA
JAN 10, 2011
FRED H. BELZ
NE 6698
REGISTERED PROFESSIONAL ENGINEER

MECHANICAL DETAILS AND INSERTS
TULUKSAK LIFT STATION
TULAKSAK, ALASKA

DATE: JAN 10, 2011
DRAWN: F.H. BELZ
CHKD:
SCALE: AS NOTED
REVISED: MARCH 23, 2011
JOB NO. C378
SHEET NO. M1-1 △1
1 OF 3

EQUIPMENT LIST HYDRONIC HEAT TRACE PIPING FOR SEWAGE FORCE MAIN	
AAV	AUTOMATIC AIR VENT, 2" FIPT CONNECTIONS, SPIROVENT JUNIOR MODEL 200TM
CP-1A, CP-1B	2-STAGE CENTRIFUGAL CIRCULATING PUMP, TYPE 304 STAINLESS STEEL CONSTURCTION, 0.5 HP TEFC 3450 RPM MOTOR, 208-230/460 VOLT 3-PHASE, GRUNDFOS 1SVB1C9B0
CV-1	THREE WAY CONTROL VALVE, 1-1/4" FIPT, CV 18.7, B TO AB PORT OPEN ON STEM RISE. HONEYWELL V5013N1071 WITH ML7424B3012 SPRING DIRECT COUPLED GLOBE VALVE ACTUATOR (PULLS STEM UP TO FULL BYPASS ON POWER FAILURE.
ET-1A, ET-1B	THERMAL EXPANSION TANKS, VERTICAL WITH STAND, BLADDER TYPE, ASME SECTION VIII, DIV 1 CONSTRUCTION, MAX ACCEPTANCE VOLUME 34.0 GALLONS, 1" FIPT BOTTOM CONNECTION, AMTROL AX-200(V).
GT-1	GLYCOL SOLUTION MIXING TANK, 100 GAL CAPACITY, WITH INTEGRAL PUMP AND PRESSURE REGULATOR, AXIOM SF100-L
PG-1	PROCESS PRESSURE GAUGE, SILICONE FILLED CASE, POCAN CASE, ½" MIPT BOTTOM PORT, 0-60 PSIG, WIKA TYPE 213.34, PART # 9834354
RV-1	PRESSURE RELIEF VALVE, ¾" x ¾" FIPT, SET 30 PSIG, RATED 650,000 BTU/HR RELIEF, BRONZE BODY CONSTRUCTION, NONMETALLIC DISC TO METAL SEATING.
ST-1	WYE-TYPE STRAINER, 2" BRONZE SWEAT TYPE, 20 MESH SS SCREEN, METRAFLEX STYLE BSJC 2" OR EQUAL
TC-1	ELECTRONIC STAND-ALONE TEMPERATURE CONTROLLER, WITH REMOTE RESISTANCE SENSOR, NEMA 4X ENCLOSURE, 120 VAC OR 24 VAC POWER INPUT, 2-10 VDC, 0-10 VDC, 4-20 MA DC OUTPUT, HONEYWELL T775M2022 WITH INCLUDED SENSOR, C7031D2003 5 IN IMMERSION SENSOR WITH WELL.
TE-1	PART OF TC-1 ASSEMBLY (C7031D2003 5 IN IMMERSION SENSOR WITH WELL).

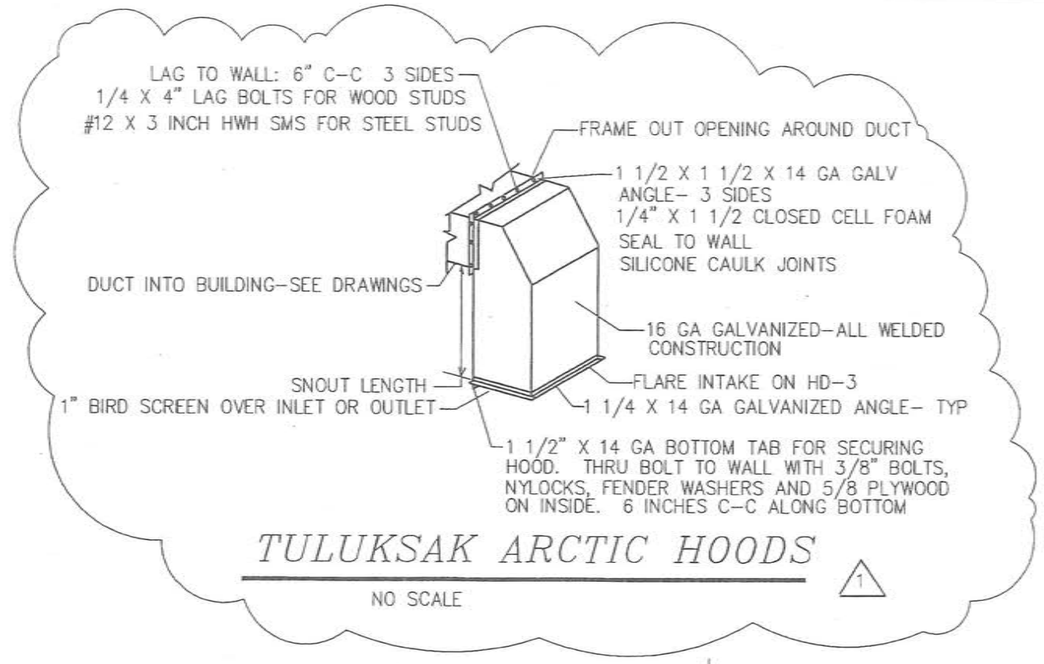

TULUKSAK ARCTIC HOODS

NO SCALE

1

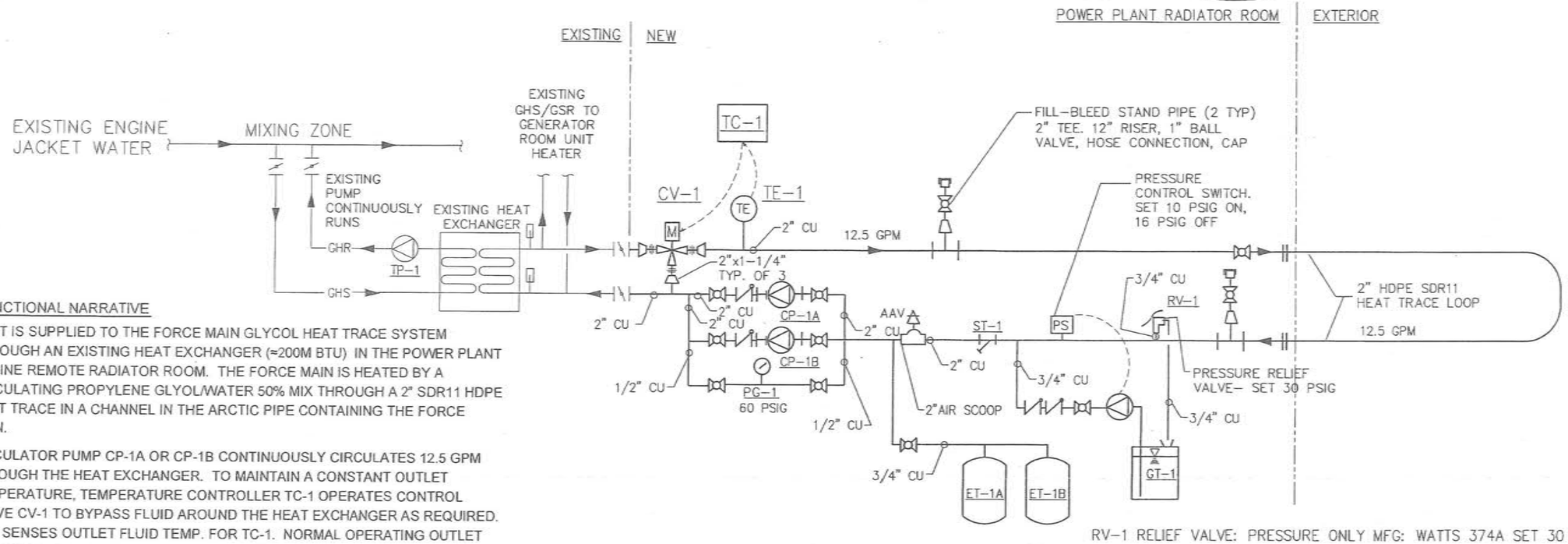

RV-1 RELIEF VALVE: PRESSURE ONLY MFG: WATTS 374A SET 30 PSIG

FUNCTIONAL NARRATIVE

HEAT IS SUPPLIED TO THE FORCE MAIN GLYCOL HEAT TRACE SYSTEM THROUGH AN EXISTING HEAT EXCHANGER (≈200M BTU) IN THE POWER PLANT ENGINE REMOTE RADIATOR ROOM. THE FORCE MAIN IS HEATED BY A CIRCULATING PROPYLENE GLYOL/WATER 50% MIX THROUGH A 2" SDR11 HDPE HEAT TRACE IN A CHANNEL IN THE ARCTIC PIPE CONTAINING THE FORCE MAIN.

CIRCULATOR PUMP CP-1A OR CP-1B CONTINUOUSLY CIRCULATES 12.5 GPM THROUGH THE HEAT EXCHANGER. TO MAINTAIN A CONSTANT OUTLET TEMPERATURE, TEMPERATURE CONTROLLER TC-1 OPERATES CONTROL VALVE CV-1 TO BYPASS FLUID AROUND THE HEAT EXCHANGER AS REQUIRED. TE-1 SENSES OUTLET FLUID TEMP. FOR TC-1. NORMAL OPERATING OUTLET TEMPERATURE IS 60F.

PRESSURE RELIEF VALVE RV-1 PROTECTS THE SYSTEM FROM OVER PRESSURE, AND IS SET AT 30 PSIG. GLYCOL TANK GT-1 SERVES AS A MAKE-UP UNIT FOR GLYCOL MIX REPLACEMENT IN THE HEAT TRACE LOOP. EXPANSION TANKS ET-1A AND ET-1B SERVE TO ALLOW ROOM FOR EXPANSION OF HEAT TRANSFER FLUID OVER THE EXPECTED RANGE OF TEMPERATURE OF THE SYSTEM.

TULUKSAK HYDRONIC PIPING HEAT TRACE PIPING SCHEMATIC

NO SCALE

1 03-23-2011 REVISE HOOD DETAIL

CAPSTONE ENGINEERING LLC
MECHANICAL ENGINEERS
12210 BUSINESS BLVD. STE 6, PMB 169
EAGLE RIVER, ALASKA 99577
TELEPHONE & FAX 541-884-8065

STATE OF ALASKA 49TH FREDERICK H. BELZ 3/23/11 PROFESSIONAL ENGINEER

MECHANICAL DETAILS AND INSERTS
TULUKSAK LIFT STATION
TULAKSAK, ALASKA

DATE: JAN 10, 2011
DRAWN: F.H. BELZ
CHKD:
SCALE: AS NOTED
REVISED:
JOB NO. C378

SHEET NO. M1-2 | 2 OF 3

BACK-UP GLYCOL HEAT TRACE NOTES:

1. THE BACK-UP HEAT TRACE SYSTEM IS DESIGNED TO MAINTAIN FORCEMAIN TEMPERATURE IN THE EVENT THAT THE TEMPERATURE OF THE WASTEWATER IS INADEQUATE TO PREVENT FREEZING
2. HEAT TRANSFER FLUID WILL BE A 50/50 INHIBITED PROPYLENE GLYCOL / WATER MIX, WHICH WILL ALLOW FLUID FLOW TO -30°F AND FREEZE PROTECTION OF THE GLYCOL TO -60°F.

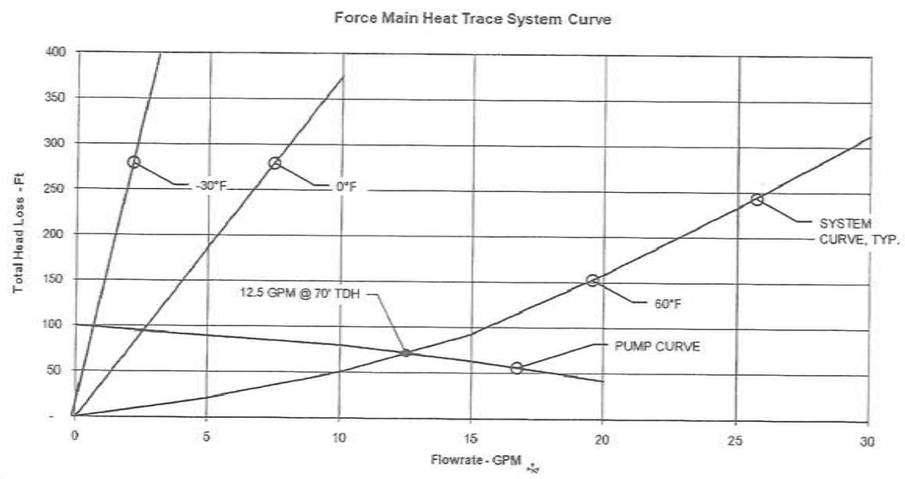

FORCEMAIN BACKUP HEAT TRACE SYSTEM CURVE

BACKUP GLYCOL HEAT TRACE FOR FORCEMAIN SYSTEM
EQUIVALENT LOOP LENGTH WITH FITTINGS: 7,600 LF
PIPE: 2" SDR 11 HDPE
PUMP: G&L #1SVC-2 STAGE VERTICAL SS CENTRIFUGAL
MODEL# 1SVB1C9B0
TAG# CP-1A AND 1B

TOTAL FORCEMAIN HEAT DEMAND = 21,600 Btu/Hr

1 / M1-3 GLYCOL CIRC. PUMP CURVE
NTS

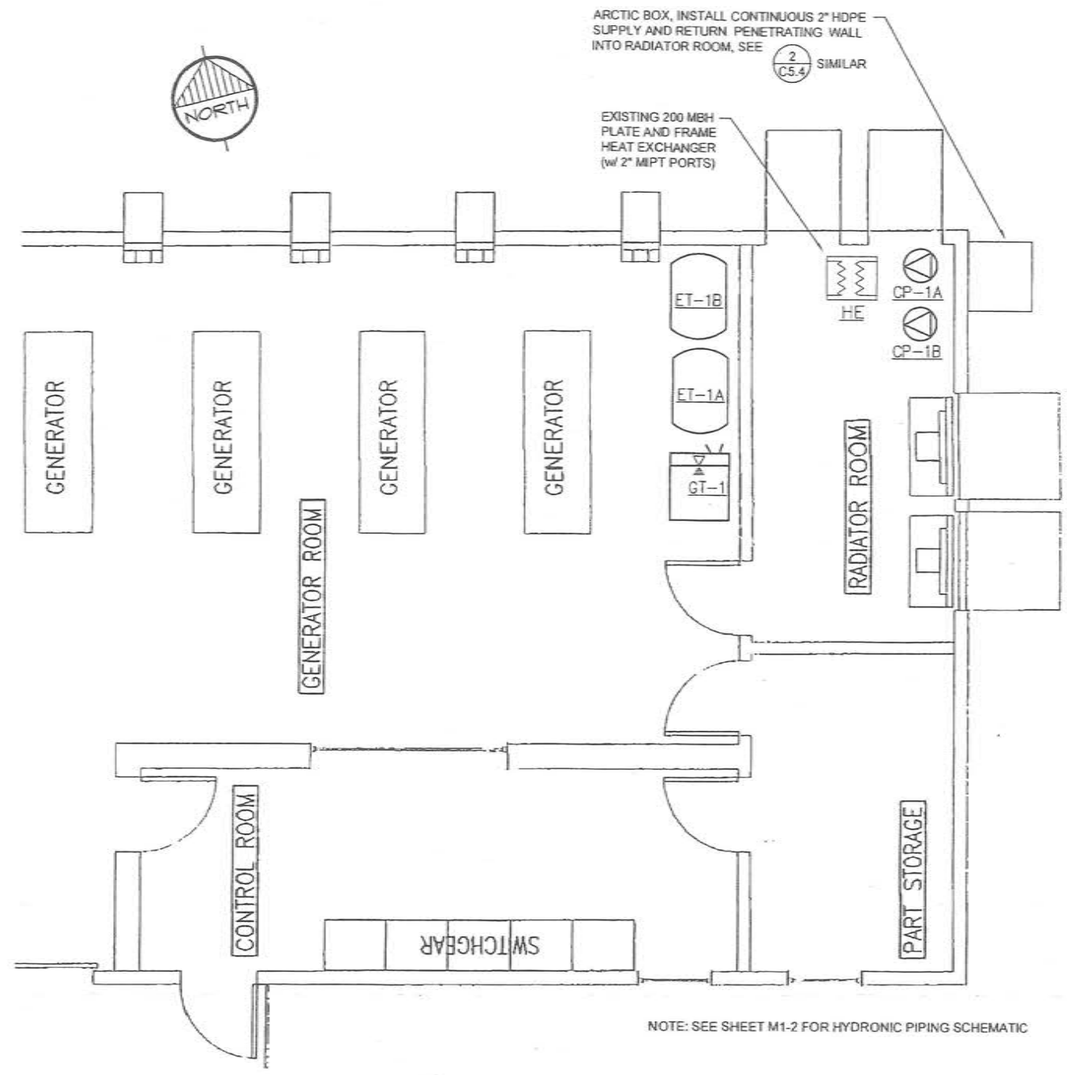

NOTE: SEE SHEET M1-2 FOR HYDRONIC PIPING SCHEMATIC

2 / M1-3 POWER PLANT MECH. PLAN
NTS

CAPSTONE ENGINEERING LLC
MECHANICAL ENGINEERS
12110 BUSINESS BLVD. STE. 6, PMB 169
EAGLE RIVER, ALASKA 99577
TELEPHONE & FAX 541-884-8065

STATE OF ALASKA 49TH FREDERICK H BELZ #12594 1/25/11 REGISTERED PROFESSIONAL ENGINEER

MECHANICAL DETAILS AND INSERTS
TULUKSAK LIFT STATION
TULAKSAK, ALASKA

DATE: JAN 10, 2011
DRAWN: F.H. BELZ
CHKD:
SCALE: AS NOTED
REVISED:
JOB NO. C378

SHEET NO. M1-3 | 3 OF 3

G:\ACAD\TULUKSAK\TLT0901 2008 Waste water disposal area\FC Rev Jan 2011\M1-3 Mechanical Fred Beltz.dwg, 10/14/2011 4:36:50 PM, cmerz, \\ce2main\LANIER MP C2050/LD520C PCL 6

ELECTRICAL LEGEND

(NOTE: THIS IS A STANDARD LEGEND AND NOT ALL SYMBOLS ARE NECESSARILY USED.)

- EXTERIOR LIGHT FIXTURE, POLE MOUNTED, HEADS AS SHOWN
- HAND HOLE
- E — ELECTRIC VAULT
- PHOTOCELL CONTROL
- LUMINAIRE - TYPE AS NOTED ON PLAN
- LUMINAIRE - WALL MOUNTED: TYPE AS NOTED ON PLAN
- LUMINAIRE - EMERGENCY LIGHT
- TRACK LIGHTING - TRACK LENGTH AS SCALED: TYPE AS NOTED ON PLAN
- EMERGENCY LIGHTING UNIT (WALL; CEILING; REMOTE HEAD): TYPE "E", UON
- EMERGENCY BATTERY 90 POWER REMOTE HEAD(S); TYPE "EBB", UON
- EXIT SIGN (CEILING; WALL); SHADE DENOTES FACE; ARROWS AS INDICATED; TYPE "X", UON
- $ — SWITCH - SINGLE POLE, SINGLE THROW, UON
- $3 — SWITCH - THREE WAY
- $4 — SWITCH - FOUR WAY
- $2 — SWITCH CONTROL FOR FIXTURES DENOTED WITH "a" APPENDED TO CIRCUIT NUMBER
- $L — SWITCH - LOW VOLTAGE
- $D — SWITCH - ELECTRONIC DIMMER SWITCH COMPATIBLE WITH LIGHT FIXTURE
- $K — SWITCH - KEYED
- $P — SWITCH - PILOT LIGHT
- $T — SWITCH - INTEGRAL MOTOR OVERLOAD
- $V — SWITCH - VARIABLE SPEED CONTROL
- $OC — LIGHT CONTROL OCCUPANCY SENSOR - WALL SWITCH BOX MOUNTED
- LIGHT CONTROL OCCUPANCY SENSOR - CEILING MOUNTED
- POWER DISTRIBUTION PANELBOARD
- METERING DEVICE
- CT — CURRENT TRANSFORMER ENCLOSURE
- POWER PANELBOARD ((NEW - SURFACE; RECESSED), (EXISTING - SURFACE; RECESSED))
- T — TRANSFORMER: APPROX. PHYSICAL SIZE AS SCALED; ACTUAL RATING AS NOTED ON ONE-LINE DIAGRAMS
- MOTOR CONNECTION
- COMBINATION BATHROOM FAN/LIGHT: TYPE AS NOTED ON PLAN
- NON-FUSED SAFETY SWITCH
- FUSED SAFETY SWITCH
- ENCLOSED CIRCUIT BREAKER SWITCH
- MOTOR STARTER
- COMBINATION MOTOR STARTER SAFETY SWITCH
- PUSH BUTTON CONTROL STATION
- J — JUNCTION BOX OR EQUIPMENT CONNECTION - FLEX OR RECEPTACLE AS REQUIRED (CEILING; WALL; FLOOR)
- FSD — POWER CONNECTION TO FSD CONTROLLED BY FIRE ALARM SYSTEM
- SIMPLEX RECEPTACLE
- DUPLEX RECEPTACLE
- DOUBLE DUPLEX RECEPTACLE
- DUPLEX RECEPTACLE - SPLIT WIRED FOR SWITCH CONTROL OF LOWER OUTLET
- DUPLEX RECEPTACLE - GFCI PROTECTED
- DUPLEX RECEPTACLE - GFCI PROTECTED MOUNTED +48" AFF
- DUPLEX RECEPTACLE - GFCI PROTECTED MOUNTED ABOVE COUNTERTOP
- DUPLEX RECEPTACLE - MOUNTED ABOVE COUNTERTOP
- DUPLEX RECEPTACLE - FLOOR MOUNTED FIRE RATED POKE THROUGH, UON
- DOUBLE DUPLEX RECEPTACLE - FLOOR MOUNTED FIRE RATED POKE THROUGH, UON
- RECEPTACLE - PENDANT MOUNTED FROM CEILING
- RECEPTACLE - FLUSH MOUNTED IN CEILING
- DRYER RECEPTACLE - 30A, 3 POLE, 4 WIRE NEMA 14-30R
- ELECTRIC RANGE RECEPTACLE - 50A, 3 POLE, 4 WIRE, NEMA 14-50R
- SPECIAL PURPOSE RECEPTACLE - NEMA CONFIGURATION AS NOTED (SURFACE; WALL)
- GROUND CONNECTION POINT
- DUAL CHANNEL SURFACE MOUNTED RACEWAY - LENGTH AS SCALED
- SINGLE CHANNEL SURFACE MOUNTED RACEWAY - LENGTH AS SCALED
- TELECOMMUNICATION OUTLET (WALL; FLOOR)
- TELEPHONE OUTLET
- TV — TELEVISION OUTLET (WALL; CEILING)
- DUAL CHANNEL SERVICE POLE
- TELECOMMUNICATION FLOOR STANDING RACK
- TELECOMMUNICATION WALL MOUNTED RACK
- TMGB — TELECOMMUNICATION MAIN GROUNDING BUS
- TGB — TELECOMMUNICATION GROUNDING BUS
- CONTROL PANEL - TYPE AS NOTED (SURFACE; RECESSED)
- FIRE ALARM CONTROLLED MAGNETIC DOOR HOLDER / RELEASE
- ABORT STATION
- CO — CARBON MONOXIDE DETECTOR
- HEAT DETECTOR - RATE OF RISE
- 135° — HEAT DETECTOR - FIXED TEMPERATURE AS NOTED
- SMOKE DETECTOR - PHOTOELECTRIC TYPE
- M — SMOKE DETECTOR - MULTI-SENSOR TECHNOLOGY TYPE
- SMOKE DETECTOR - DUCT MOUNTED
- BR — SMOKE DETECTOR - BEAM RECEIVER
- BT — SMOKE DETECTOR - BEAM TRANSMITTER
- FLAME DETECTOR
- LINE TYPE HEAT SENSITIVE CABLE DETECTOR
- FIRE ALARM HORN
- FIRE ALARM STROBE
- FIRE ALARM COMBINATION HORN/STROBE
- P — FIRE ALARM PULL STATION
- FCP — FIRE ALARM CONTROL PANEL
- FSA — FIRE SYSTEM ANNUNCIATOR PANEL
- HCP — HALON CONTROL PANEL
- FIRE ALARM SPEAKER STROBE
- WATER FLOW BELL - 120V CONTROLLED BY FLOW SWITCH
- FIRE ALARM FLOW SWITCH
- FIRE ALARM TAMPER SWITCH
- MICROPHONE INPUT JACK
- MICROPHONE INPUT JACK - FLOOR MOUNTED
- INTERCOM CALL BUTTON
- INTERCOM ADMINISTRATION PHONE
- S — SPEAKER (WALL; CEILING)
- CLOCK SPEAKER COMBINATION WALL MOUNT UNIT
- CLOCK - WALL MOUNTED
- CR — SECURITY ACCESS CARD READER
- DS — DOOR CONTROL SOLENOID
- DM — DOOR MAGNETIC CONTACT
- GB — SECURITY SYSTEM - GLASS BREAK SENSOR
- SECURITY SYSTEM - MOTION SENSOR
- PS — SECURITY SYSTEM - DOOR POSITION SENSOR
- RB — SECURITY SYSTEM - REQUEST TO EXIT MOTION DETECTOR
- KP — SECURITY SYSTEM - ACCESS KEY PAD
- SECURITY SYSTEM - MOTION SENSOR - NARROW PATTERN
- SC — SECURITY SYSTEM - CAMERA
- ACCESS PANEL
- LINETYPE DENOTING CABLE TRAY
- LINETYPE/LINEWEIGHT DENOTING FUTURE WORK
- LINETYPE/LINEWEIGHT DENOTING EXISTING WORK TO REMAIN
- LINETYPE/LINEWEIGHT DENOTING NEW WORK
- LINETYPE/LINEWEIGHT DENOTING DEMO WORK
- Y — DENOTES AVAILABLE FAULT CURRENT

EQUIPMENT TAG LEGEND

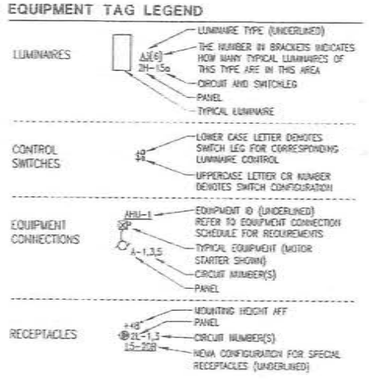

ABBREVIATIONS

(E)	EXISTING
A	AMPERES
AC	ABOVE COUNTER
AFF	ABOVE FINISHED FLOOR
AFCI	ARC FAULT CIRCUIT INTERRUPTER
AFG	ABOVE FINISHED GRADE
AHJ	AUTHORITY HAVING JURISDICTION
AIC	AMPS INTERRUPTING CAPACITY
C	CONDUIT OR CELCIUS
CAT	CATEGORY
CB	CIRCUIT BREAKER
CO	CONDUIT ONLY
CT	CURRENT TRANSFORMER
(D)	DEMOLISH
DISC	DISCONNECT
EGC	EQUIPMENT GROUNDING CONDUCTOR
F	FAHRENHEIT
FAA	FIRE ALARM ANNUNCIATOR
FACP	FIRE ALARM CONTROL PANEL
FHP	FRACTIONAL HORSEPOWER
FLA	FULL LOAD AMPS
FSD	FIRE SMOKE DAMPER
FT	FEET
FU	FUSE
G	GROUND FAULT CIRCUIT INTERRUPTER
GEC	GROUNDING ELECTRODE CONDUCTOR
HP	HORSEPOWER
ID	IDENTIFICATION
IN	INCHES
KVA	KILOVOLT-AMPERE
KW	KILOWATT
LRA	LOCKED ROTOR AMPS
LTG	LIGHTING
MCA	MINIMUM CIRCUIT AMPACITY
MDP	MAIN DISTRIBUTION PANEL
MDS	MAIN DISTRIBUTION SWITCHBOARD
MFS	MAXIMUM FUSE SIZE
(N)	NEW
NC	NORMALLY CLOSED
NO	NORMALLY OPEN
P	POLES
PC	PHOTO CELL
PH, #	PHASE
PNL	PANEL
PRI	PRIMARY
REC	RECEPTACLE
(R)	RELOCATED
RIB	RELAY IN A BOX (MOTOR RATED)
SCCR	SHORT CIRCUIT CURRENT RATING
SE	SERVICE ENTRANCE RATED
SEC	SECONDARY
SSEBJ	SUPPLY SIDE EQUIPMENT BONDING JUMPER
SVC	SERVICE
TELECOM	TELECOMMUNICATION
TGB	TELECOMMUNICATION GROUNDING BUSBAR
TMGB	TELECOMMUNICATION MAIN GROUNDING BUSBAR
TYP	TYPICAL
UON	UNLESS OTHERWISE NOTED
V	VOLTS
VA	VOLT-AMPERES
VFD	VARIABLE FREQUENCY DRIVE
W	WATTS OR WIRE
WG	WIRE GUARD
WP	WEATHERPROOF (NEMA 4 RATED)
XFMR	TRANSFORMER

MOUNTING HEIGHT SCHEDULE

PANELBOARDS (TOP)	+70"
SPECIAL SYSTEM PANELS (TOP)	+66"
POWER METER BASE (CENTER LINE OF SOCKET)	+66"
CONTACTORS, MOTOR STARTERS, DISCONNECT SWITCHES (TOP)	+66"
RECEPTACLES IN OFFICE AREAS	+18"
RECEPTACLES IN NON-FINISHED AND MECHANICAL SPACES	+46"
ABOVE COUNTER DEVICES (DENOTED "AC" OR BY SYMBOL)	SEE NOTES
WALL MOUNTED SWITCHES	+46"
TELECOMMUNICATION OUTLETS	+18"
WALL MOUNTED TELEPHONE OUTLET (DENOTED "W")	+54"
CLOCK OUTLETS	+80" TO BOTTOM
HORNS/STROBES/HORN STROBES/DOORBELL RINGER	+80" TO BOTTOM
PULL STATIONS, PUSH BUTTONS, DOORBELL PUSHBUTTON	+48"

NOTES:

1) COORDINATE AND INSTALL ALL EQUIPMENT AND DEVICES WITH THE ARCHITECTURAL PLANS AND ANY SPECIFICALLY DENOTED REQUIREMENTS.
2) MOUNTED HEIGHTS SHALL PREVAIL UNLESS OTHERWISE NOTED OR FIELD CONDITIONS REQUIRE DEVIATION.
3) MOUNTING HEIGHTS ARE FROM FINISHED FLOOR TO THE CENTERLINE OF THE DEVICE UNLESS OTHERWISE NOTED.
4) COORDINATE MOUNTING HEIGHTS AND LOCATIONS OF OUTLETS DENOTED AS ABOVE COUNTER TO BE INSTALLED 6" ABOVE COUNTERS OR BACKSPLASHES, WHICHEVER IS HIGHER.

GENERAL REQUIREMENTS

1. ALL ELECTRICAL WORK SHALL BE INSTALLED IN ACCORDANCE WITH ALL REQUIREMENTS OF THE LATEST EDITION OF THE NATIONAL ELECTRIC CODE, STATE, MUNICIPAL, AND FEDERAL LAWS, AMENDMENTS AND/OR ORDINANCES GOVERNING THE PROJECT. IF IN ANY INSTANCE THE PLANS AND SPECIFICATIONS ARE IN DIRECT CONFLICT WITH SUCH CODES, LAWS, AND/OR ORDINANCES, THE CODE, LAWS, AND/OR ORDINANCES SHALL HAVE JURISDICTION AND THE WORK IN QUESTION SHALL BE INSTALLED ACCORDING TO THE CODES, LAWS, AND/OR ORDINANCES. ALL WORK SHALL BE PERFORMED UNDER THE SUPERVISION OF A CERTIFIED ELECTRICIAN.
2. THE CONTRACTOR SHALL OBTAIN ALL REQUIRED CONSTRUCTION PERMITS AND PAY ALL ASSOCIATED FEES.
3. MATERIALS AND EQUIPMENT SHALL BE COMMERCIAL GRADE AND ACCEPTABLE TO THE AUTHORITY HAVING JURISDICTION AS SUITABLE FOR THE USE INTENDED. ALL ELECTRICAL EQUIPMENT SHALL INCLUDE THE SEAL OF A NATIONALLY RECOGNIZED TESTING LABORATORY FOR THE PURPOSE FOR WHICH IT IS INSTALLED. WHENEVER POSSIBLE, SIMILAR ITEMS SHALL BE SUPPLIED BY THE SAME MANUFACTURER THROUGHOUT THE PROJECT.
4. COORDINATE AND PROVIDE THE EQUIPMENT WITH THE SHORT CIRCUIT CURRENT RATING (SCCR) FOR THE AVAILABLE FAULT CURRENT AT THE POINT OF THE SYSTEM WHERE INSTALLED. SERIES RATING OF EQUIPMENT IS ACCEPTABLE. PROVIDE ARC FAULT WARNING LABELS ON ALL PANELBOARDS, MCC UNITS AND SIMILAR EQUIPMENT PER NEC REQUIREMENTS.
5. THE FOLLOWING WIRING METHODS SHALL BE ACCEPTABLE FOR INSTALLATION OF ELECTRICAL CIRCUITS: TYPE MC CABLE, INTERMEDIATE METAL CONDUIT, RIGID METAL CONDUIT, RIGID NONMETALLIC CONDUIT (FOR UNDERGROUND USE ONLY), ELECTRICAL METALLIC TUBING, FLEXIBLE METALLIC TUBING, FLEXIBLE METAL CONDUIT, AND LIQUID TIGHT FLEXIBLE CONDUIT. ALL WIRING METHODS SHALL INCLUDE AN EQUIPMENT GROUNDING CONDUCTOR TO BE INSTALLED THEREIN AND SIZED FOR THE CIRCUITS SERVED.
6. ALL CONDUCTORS SHALL BE COPPER. ALL CONDUCTORS IN UNHEATED SPACES OF THE BUILDING OR LOCATED OUTSIDE OF THE BUILDING ARE REQUIRED TO HAVE TYPE XHHW 90 DEGREE C INSULATION. ALL CONDUCTORS LOCATED IN HEATED SPACES CAN BE XHHW OR THHN 90 DEGREE C INSULATION UNLESS NOTED OTHERWISE. CONDUCTOR AMPACITY SHALL BE BASED ON TABLE 310-16 OF THE NEC. USE 60-DEGREE C. RATING FOR CIRCUITS TERMINATING ON DEVICES RATED BELOW 100A. USE 75-DEGREE C RATING FOR CIRCUITS TERMINATING ON DEVICES AND IN ENCLOSURES RATED 100A AND OVER. DERATE CONDUCTORS PER NEC REQUIREMENTS.
7. CONCEAL ALL ELECTRICAL RACEWAYS, BOXES, CABLING, CONDUCTORS AND THE LIKE IN WALLS, BELOW FLOORS, SLABS OR ABOVE FINISHED CEILING SPACES. ELECTRICAL EQUIPMENT AND WIRING CAN BE EXPOSED IN MECHANICAL ROOMS, TELECOMMUNICATION ROOMS OR WHERE SPECIFICALLY NOTED.
8. DO NOT ROUTE RACEWAYS ON THE EXTERIOR SURFACE OF THE BUILDING OR THE ROOF UNLESS SPECIFICALLY NOTED OTHERWISE.
9. PROVIDE ALL WIRING AND EQUIPMENT IN WET AND EXTERIOR LOCATIONS USING EQUIPMENT AND WIRING METHODS RATED FOR WET ENVIRONMENTS.
10. ALL CABLING LOCATED IN CEILING SPACES THAT ARE PLENUMS SHALL BE PLENUM RATED.
11. PROVIDE ACCESS PANELS FOR ALL LOCATION NECESSARY TO ACCESS ELECTRICAL EQUIPMENT AND JUNCTION BOXES. ACCESS PANELS SHALL BE FIRE RATED EQUAL TO OR EXCEEDING THE ADJACENT WALL OR CEILING CONSTRUCTION AND PAINTED TO MATCH.
12. CONNECT ALL EMERGENCY LIGHTING UNITS AND MODULES TO THE LOCAL AREA LIGHTING CIRCUITS AHEAD OF ANY SWITCHES OR RELAYS. LOCATE REMOTE TEST SWITCHES AND INDICATOR LIGHTS AS NECESSARY FOR TEST SWITCHES ON EMERGENCY MODULES.
13. SEAL ALL PENETRATIONS. SEAL PENETRATIONS AT ALL FIRE WALLS WITH APPROVED FIRE STOPPING COMPOUND.
14. OUTLET BOXES LOCATED BACK TO BACK IN FIRE RATED WALLS SHALL BE SPACED A MINIMUM OF 2 FEET HORIZONTALLY OR PROVIDE AN APPROVED FIRE PROTECTIVE MATERIAL PLACED ON OR AROUND THEM LISTED FOR THE FIRE RATING OF THE WALL.
15. CONTRACTOR SHALL SUBMIT REQUEST FOR SUBSTITUTION IN WRITING TO THE ENGINEER.
16. PROVIDE SEISMIC SUPPORT AND DESIGN PER IBC REQUIREMENTS.
17. THE ELECTRICAL CONTRACTOR SHALL CONTACT EACH SERVING UTILITY CO. AND VERIFY EXACT SERVICE REQUIREMENTS FOR POWER AND TELEPHONE. THE CONTRACTOR SHALL COORDINATE AND PROVIDE ALL REQUIREMENTS OF EACH SERVING UTILITY AND ALL EQUIPMENT SHALL CONFORM TO THE SERVING UTILITY STANDARDS AND REQUIREMENTS.

ELECTRICAL SHEET LIST

E1.1	ELECTRICAL LEGEND & SCHEDULES
E2.1	ELECTRICAL SITE PLAN
E3.1	ELECTRICAL NEC CLASSIFIED BOUNDARY DETAILS
E4.1	ELECTRICAL CELL TRANSFER MANHOLE PLANS
E4.2	ELECTRICAL POWER PLANT PLANS
E5.1	ELECTRICAL LIFT STATION PLANS
E5.2	ELECTRICAL LIFT STATION PLANS
E6.1	ELECTRICAL LIFT STATION DIAGRAMS & PANEL SCHEDULES
E6.2	ELECTRICAL LIFT STATION CONTROLS
E6.3	ELECTRICAL POWER PLANT CONTROLS & DIAGRAMS

EIC ENGINEERS, INC
ELECTRICAL ENGINEERS
6927 OLD SEWARD HWY, SUITE 200
ANCHORAGE, AK 99518
T 907.349.9712
F 907.349.9713
www.eicinc.com
EIC JOB #890-1223

RECORD DRAWING CERTIFICATE
THESE DRAWINGS REFLECT RECORDED INFORMATION OBTAINED DURING CONSTRUCTION. INFORMATION PROVIDED HEREIN IS ACCURATE TO THE BEST OF MY KNOWLEDGE.
NAME
DATE

SCALE:
IF NOT ONE INCH ON THIS SHEET, ADJUST SCALES ACCORDINGLY

STATE OF ALASKA
ERIC B. CONWAY
No. CE-9713
10/11/11
REGISTERED PROFESSIONAL ENGINEER

2009 WASTEWATER SYSTEM IMPROVEMENTS
ELECTRICAL
LEGEND & SCHEDULES
TULUKSAK, ALASKA

CE2 ENGINEERS, INC.
PO BOX 110594 ANCHORAGE, AK 99511 PH: 907-349-9518 FAX: 907-349-9515

REVISION	BY	DATE

Project No.
Date JAN 2011
Designed BLS
Drawn BLS
Approved EGC

Sheet No.
E1.1

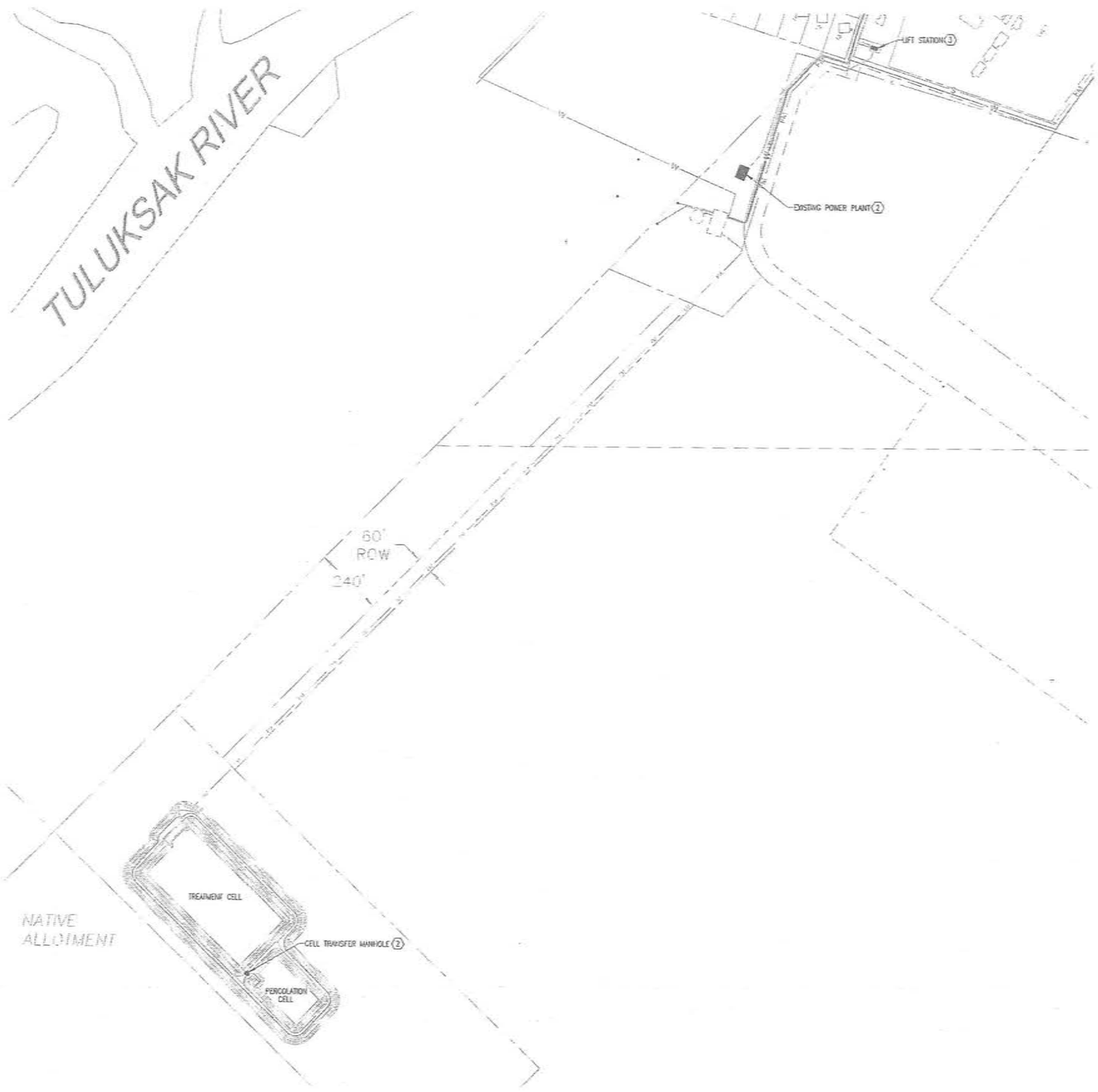

SHEET NOTES

1. CONTRACTOR TO PROVIDE PORTABLE GENERATOR POWER CONNECTION AND SEWER PIPE HEAT TRACE AT NEW CELL TRANSFER MANHOLE LOCATION. SEE E4.1 FOR DETAIL.
2. CONTRACTOR TO PROVIDE NEW BRANCH CIRCUITS IN EXISTING POWER PLANT FOR HEAT LOOP PUMP CONTROL PANEL AND CIRCULATION PUMPS. SEE 1/E4.2 FOR DETAIL.
3. CONTRACTOR TO PROVIDE ELECTRICAL INSTALLATIONS IN NEW LIFT STATION. SEE E5.1, E5.2, AND E6.1 FOR DETAIL.

1 E2.1 **ELECTRICAL SITE PLAN**

SCALE: 1" = 200'-0"

PLAN N

EIC ENGINEERS, INC
ELECTRICAL ENGINEERS
6937 OLD SEWARD HWY, SUITE 200
ANCHORAGE, AK 99518
T 907.349.9712
F 907.349.9713
www.eicengr.com
BC ICB #EIO-1323

RECORD DRAWING CERTIFICATE

THESE DRAWINGS REFLECT RECORDED INFORMATION OBTAINED DURING CONSTRUCTION. INFORMATION PROVIDED HEREIN IS ACCURATE TO THE BEST OF MY KNOWLEDGE.

NAME DATE

SCALE:

DATE BY REVISION

2009 WASTEWATER SYSTEM IMPROVEMENTS

ELECTRICAL SITE PLAN

TULUKSAK, ALASKA

CE2 ENGINEERS, INC.
PO BOX 223944 ANCHORAGE AK 99522 PH: 907-349-1019 FAX: 907-349-1015

Project No.
Date JAN 2011
Designed DLS
Drawn DLS
Approved EGC

Sheet No. E2.1

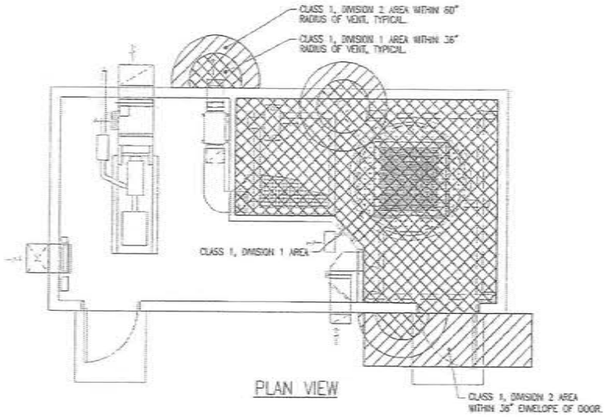

PLAN VIEW

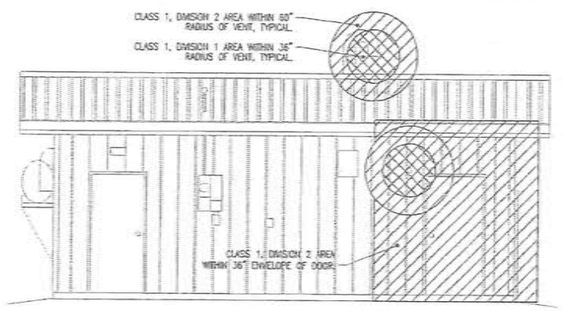

EXTERIOR ELEVATION VIEW

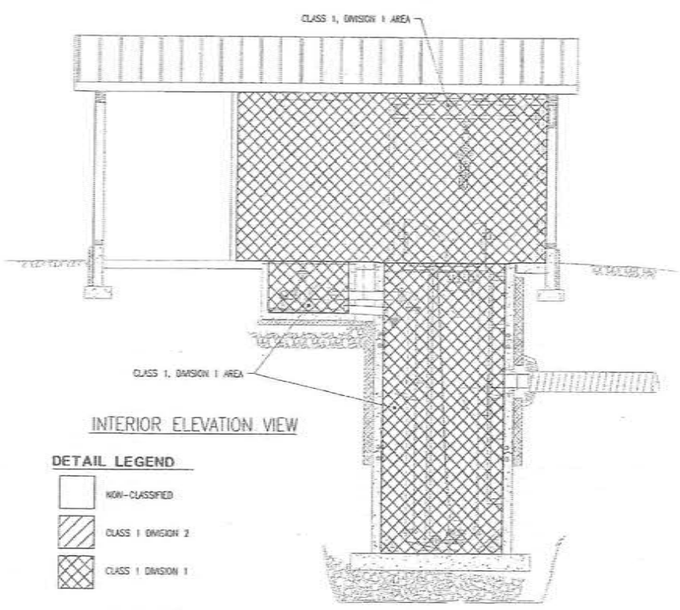

INTERIOR ELEVATION VIEW

DETAIL LEGEND

- NON-CLASSIFIED
- CLASS 1 DIVISION 2
- CLASS 1 DIVISION 1

LIFT STATION
NEC CLASSIFIED BOUNDARY DETAIL

1 / E3.1 SCALE: 1/4" = 1'-0"

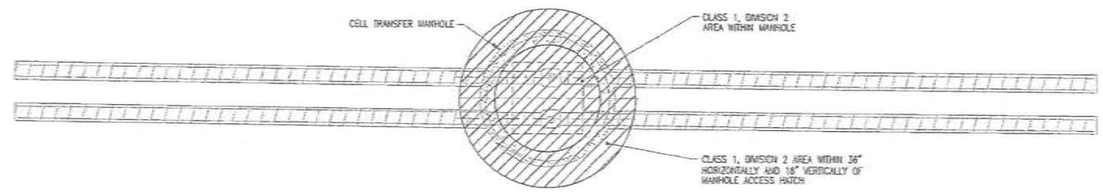

PLAN VIEW

DETAIL LEGEND

- NON-CLASSIFIED
- CLASS 1 DIVISION 2
- CLASS 1 DIVISION 1

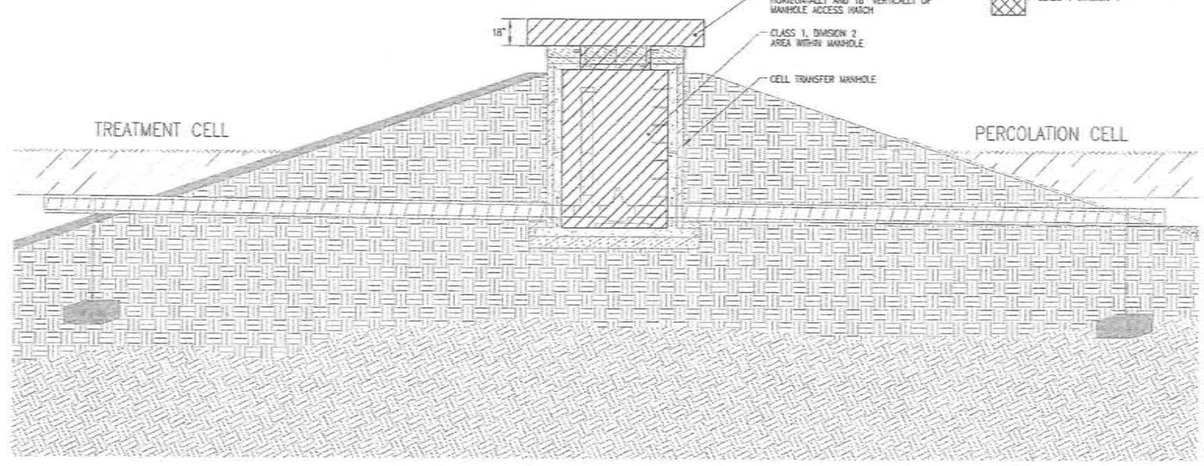

ELEVATION VIEW

CELL TRANSFER MANHOLE
NEC CLASSIFIED BOUNDARY DETAIL

2 / E3.1 SCALE: 1/4" = 1'-0"

EIC ENGINEERS, INC
ELECTRICAL ENGINEERS
6927 OLD SEWARD HWY, SUITE 200
ANCHORAGE, AK 99518
T 907.349.9712
F 907.349.9713
www.eicengr.com
EIC JOB #615-1323

RECORD DRAWING CERTIFICATE

THESE DRAWINGS REFLECT RECORDED INFORMATION OBTAINED DURING CONSTRUCTION. INFORMATION PROVIDED HEREIN IS ACCURATE TO THE BEST OF MY KNOWLEDGE.

NAME DATE

SCALE:

BAR IS ONE INCH ON ORIGINAL DRAWING

0 1"

IF NOT ONE INCH ON THIS SHEET, ADJUST SCALE ACCORDINGLY

STATE OF ALASKA
ERIC S. CONRAD
No. CE-9712
06/01/11
REGISTERED PROFESSIONAL ENGINEER

2009 WASTEWATER SYSTEM IMPROVEMENTS

ELECTRICAL
NEC CLASSIFIED
BOUNDARY PLANS

TULUKSAK, ALASKA

CE2 ENGINEERS, INC.
PO BOX 22266 ANCHORAGE, AK 99502 PH: 907.349.9169 FAX: 907.349.9173

REVISION	BY	DATE

Project No.
Date JAN 2011
Designed BLS
Drawn BLS
Approved EOC

Sheet No.
E3.1

SHEET NOTES

1. WRAP EXPOSED PIPING AND VALVES IN MANHOLE WITH HEAT TRACE FOR FREEZE PROTECTION. PROVIDE AT LEAST 1 REVOLUTION PER FOOT ON EACH OF THE PIPES.

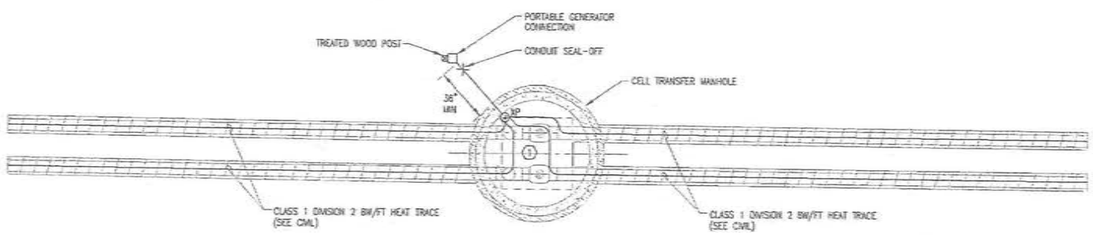

1 CELL TRANSFER MANHOLE ELECTRICAL PLAN
E4.1 SCALE: 1/4" = 1'-0"

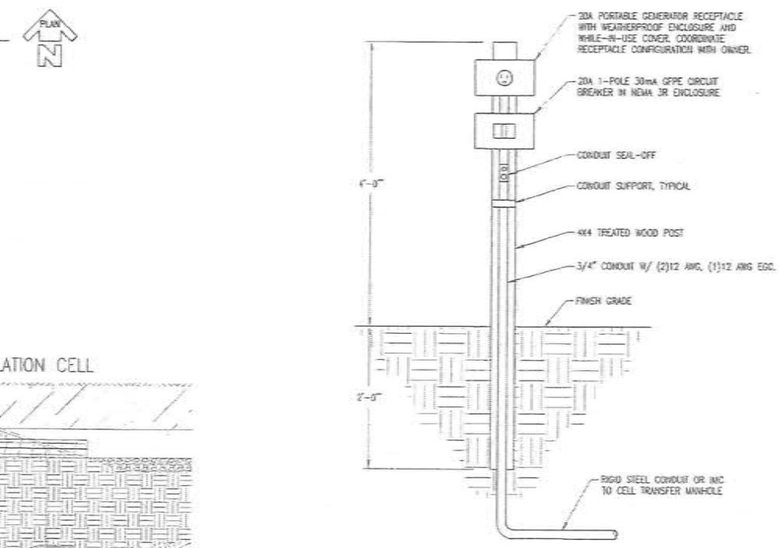

3 PORTABLE GENERATOR CONNECTION DETAIL
E4.1 SCALE: NONE

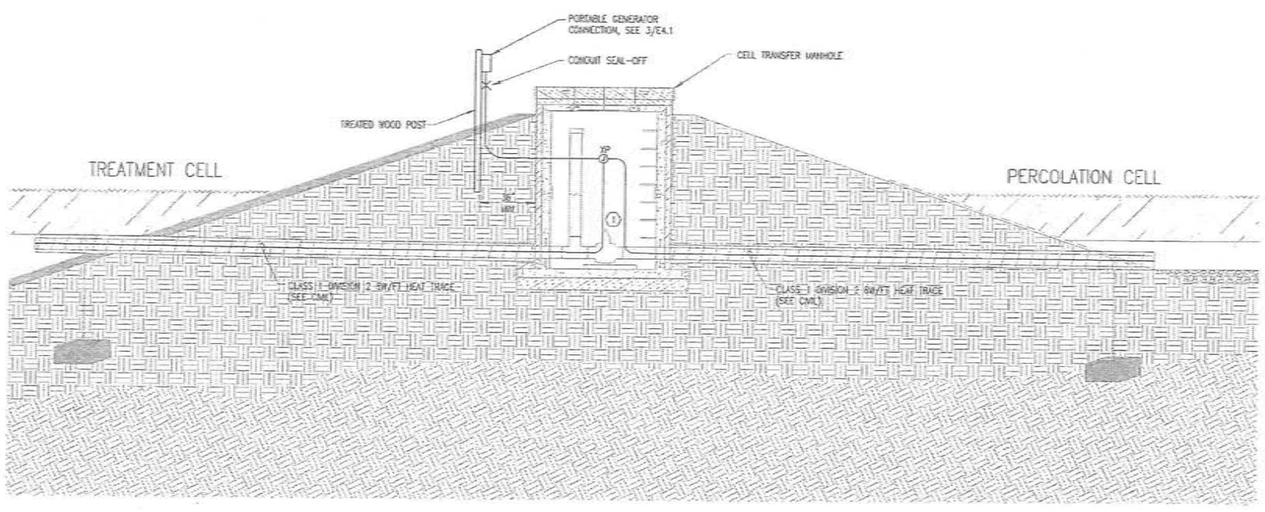

2 CELL TRANSFER MANHOLE ELEVATION
E4.1 SCALE: 1/4" = 1'-0"

EIC ENGINEERS, INC
ELECTRICAL ENGINEERS
6927 OLD SEWARD HWY, SUITE 200
ANCHORAGE, AK 99518
T 907.349.9712
F 907.349.9712
www.eicinc.com
EIC ICS #510-1323

RECORD DRAWING CERTIFICATE
THESE DRAWINGS REFLECT RECORDED INFORMATION OBTAINED DURING CONSTRUCTION. INFORMATION PROVIDED HEREIN IS ACCURATE TO THE BEST OF MY KNOWLEDGE.
NAME DATE

SCALE:
0 0.5 1.0 1.5 2.0 INCHES ON ORIGINAL DRAWING
0 1 2 3 4 5 6 7 8 9 10 11 12 FEET FOR 1/4" SCALE DRAWINGS
1" = 1/4" SCALE DRAWINGS

WILLIAM SAFE MILLER
STATE OF ALASKA

STATE OF ALASKA
ERIC D. CONRAD
No. EE-9713
31/11/11
REGISTERED PROFESSIONAL ENGINEER

2009 WASTEWATER SYSTEM IMPROVEMENTS
ELECTRICAL CELL TRANSFER MANHOLE PLANS
TULUKSAK, ALASKA

CE2 ENGINEERS, INC.
PO BOX 223243 ANCHORAGE, AK 99523 PH: 907-349-1019 FAX: 907-349-1019

REVISION	BY	DATE

Project No. ____
Date JAN 2011
Designed B.L.S.
Drawn B.L.S.
Approved E.D.C.

Sheet No.
E4.1

SHEET NOTES

1. PROVIDE BRANCH CIRCUITS IN EXISTING PANEL 'SS' (208Y/120V, 150A, 3Ø, 4W) FOR FEED TO NEW HEAT LOOP CONTROL PANEL AND CIRCULATION PUMPS. SEE 3/E6.3 FOR DETAIL.
2. PROVIDE HEAT LOOP PUMP CONTROL PANEL. SEE 1/E6.3 AND 2/E6.3 FOR DETAIL.

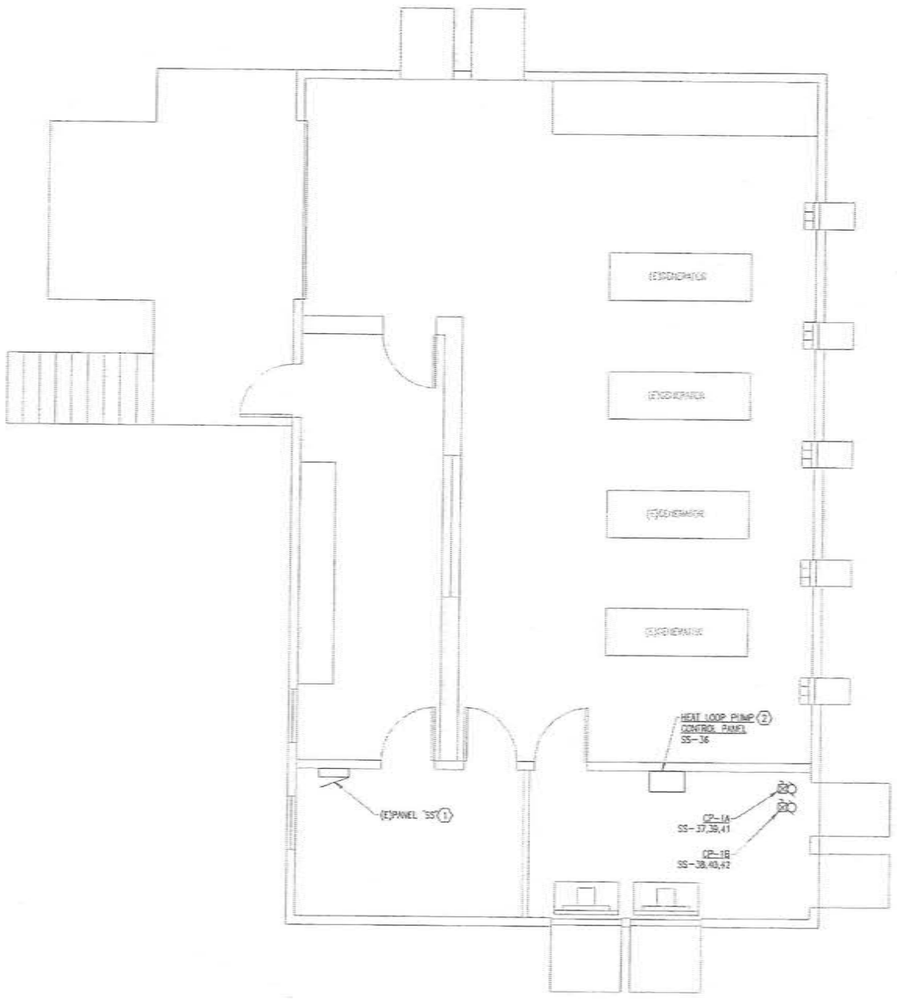

1 / E4.2 EXISTING POWER PLANT PLAN

SCALE: 1/4" = 1'-0"

EIC ENGINEERS, INC
ELECTRICAL ENGINEERS
6927 OLD SEWARD HWY, SUITE 200
ANCHORAGE, AK 99518
T 907.349.9717
F 907.349.9713
www.eicong.com
EIC JOB #2010-1 331

RECORD DRAWING CERTIFICATE
THESE DRAWINGS REFLECT RECORDED INFORMATION OBTAINED DURING CONSTRUCTION; INFORMATION PROVIDED HEREIN IS ACCURATE TO THE BEST OF MY KNOWLEDGE.
NAME DATE

SCALE:
SHEET SIZE INDICATED ON ORIGINAL DRAWING
IF NOT THIS INDICATE SCALE ACCORDINGLY

STATE OF ALASKA
ERIC D. CONNOR
No. CE-9713
31/11/11
REGISTERED PROFESSIONAL ENGINEER

2009 WASTEWATER SYSTEM IMPROVEMENTS
ELECTRICAL POWER PLANT PLANS
TULUKSAK, ALASKA

CE2 ENGINEERS, INC.
PO BOX 210094 ANCHORAGE, AK 99521 PH: 907-346-1910 FAX: 907-346-1915

REVISION	BY	DATE

Project No. ____
Date JAN 2011
Designed BLS
Drawn BLS
Approved EDC

Sheet No.
E4.2

SHEET NOTES

1. PROVIDE EXPLOSION PROOF JUNCTION BOXES FOR WET WELL PUMP CABLE TERMINATIONS. SEE 2/E5.2 FOR DETAIL.
2. PROVIDE NEMA 4X JUNCTION FOR FLOAT SWITCH, AND LEVEL TRANSDUCER CABLE TERMINATIONS. SEE 2/E5.2 FOR DETAIL.
3. PROVIDE CONDUIT SEAL-OFF AT HAZARDOUS BOUNDARY, TYPICAL.
4. PROVIDE CONDUIT FROM CONTROL J-BOX TO BUILDING EXTERIOR FOR LEVEL TRANSDUCER BELLOWS VENTILATION.
5. PROVIDE EXPLOSION PROOF STATUS LIGHTS TO BUILDING EXTERIOR, CONTROL FROM WET WELL VENTILATION CONTROL PANEL. SEE MECHANICAL AND 1/E5.4 FOR DETAIL.
6. PROVIDE EXPLOSION PROOF SELECTOR SWITCH TO BUILDING EXTERIOR, CONTROL FROM WET WELL VENTILATION CONTROL PANEL. SEE MECHANICAL AND 1/E5.4 FOR DETAIL.
7. EF-1 CONTROLLED THRU WET WELL VENTILATION CONTROL PANEL. SEE MECHANICAL AND 1/E5.4 FOR DETAIL.

LUMINAIRE SCHEDULE

TYPE	DESCRIPTION	LAMPS	MOUNTING	MANUFACTURER/MODEL	NOTES
LB2	LOW PROFILE ARCHITECTURAL WRAP W/ PRISMATIC LENS	(2) 32W T8	CEILING SURFACE	LITHONIA #LB-2-32-MVOLT-GEB10IS	
LB2E	IDENTICAL TO TYPE 'LB2' EXCEPT W/ 1400 LUMEN BATTERY UNIT	(2) 32W T8	CEILING SURFACE	LITHONIA #LB-2-32-MVOLT-GEB10IS-EL14	
XP1	CLASS 1 DIVISION 1 INCANDESCENT GLOBE & GUARD	(1) 150W INCAN	CEILING SURFACE	HUBBELL #HLE-M-I-15-120-X2-G-HLEMC1	
ZW1	WALL MOUNTED AREA LIGHT W/ CUTOFF OPTICS & INTEGRAL PHOTOCELL	(1) 35W HPS	EXTERIOR WALL	LITHONIA #TWAC-35S-120-PE	

A) CATALOG NUMBERS ARE FOR GENERAL REFERENCE AND ARE NOT INCLUSIVE OF ALL OPTIONS OR REQUIREMENTS DENOTED ON PLANS AND SPECIFICATIONS.
B) REFER TO ARCHITECTURAL DRAWINGS FOR EXACT LOCATION AND PROVIDE MOUNTING HARDWARE/FLANGES ETC FOR ALL LUMINAIRES FOR CEILING TYPES SHOWN.
C) LUMINAIRES NOTED ON THE FLOOR PLANS AS 'NL' (NIGHTLIGHT) SHALL BE CONNECTED TO UNSWITCHED POWER CIRCUIT NOTED ON DRAWINGS.
D) ALL FLUORESCENT BALLASTS TO BE ELECTRONIC WITH LESS THAN OR EQUAL 10% TOTAL HARMONIC DISTORTION.
E) ALL FLUORESCENT LAMPS TO BE 3500K.
F) PROVIDE ROUGH SERVICE LAMPS FOR ALL INCANDESCENT LUMINAIRES.

REFERENCED NOTES

1) NONE.

MECHANICAL EQUIPMENT CONNECTION SCHEDULE

UNIT ID	LOCATION OR FUNCTION	LOAD RATINGS KVA	HP	FLA	MCA	MFS	V	PH	CONDUCTORS & CONDUIT	NOTES
EF-1	CLASS 1 DIVISION 1 EXHAUST FAN		1/4				120	1	(2)12 AWG, (1)12 AWG EGC, 1/2" C.	2
SP-1	SEWAGE PUMP		10				208	3	SEE ONE-LINE DIAGRAM	1
SP-2	SEWAGE PUMP		10				208	3	SEE ONE-LINE DIAGRAM	1
UH-1	CLASS 1 DIVISION 1 ELECTRIC UNIT HEATER	10					208	3	(3)8 AWG, (1)10 AWG EGC, 3/4" C.	
UH-2	ELECTRIC UNIT HEATER	3					208	1	(2)12 AWG, (1)12 AWG EGC, 1/2" C.	

STANDARD NOTES

A) REFER TO FLOOR PLAN DRAWINGS FOR EQUIPMENT TYPE REQUIREMENTS, LOCATIONS AND QUANTITIES.
B) COORDINATE ALL CONNECTION REQUIREMENTS WITH MECHANICAL AND ACTUAL EQUIPMENT SUPPLIED PRIOR TO ROUGH-IN.

REFERENCED NOTES

1) PUMP PROVIDED WITH SOFT START. COORDINATE WITH MECHANICAL.
2) EF-1 CONTROLLED THRU WET WELL VENTILATION CONTROL PANEL.

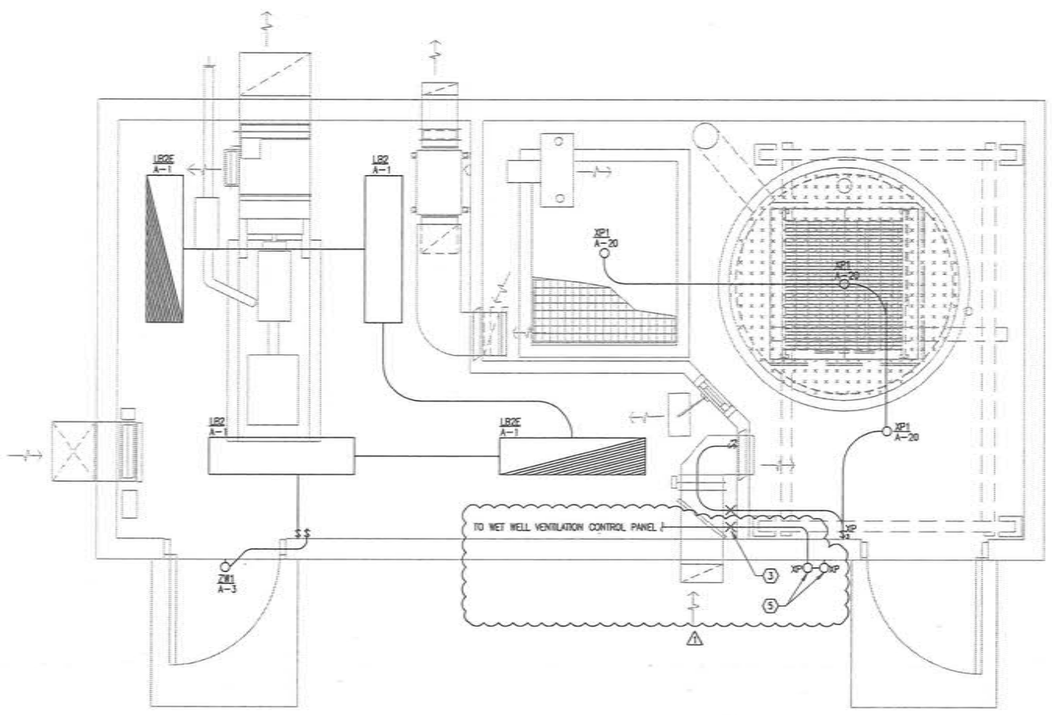

1 E5.1 LIFT STATION ELECTRICAL LIGHTING PLAN
SCALE: 1/2" = 1'-0"

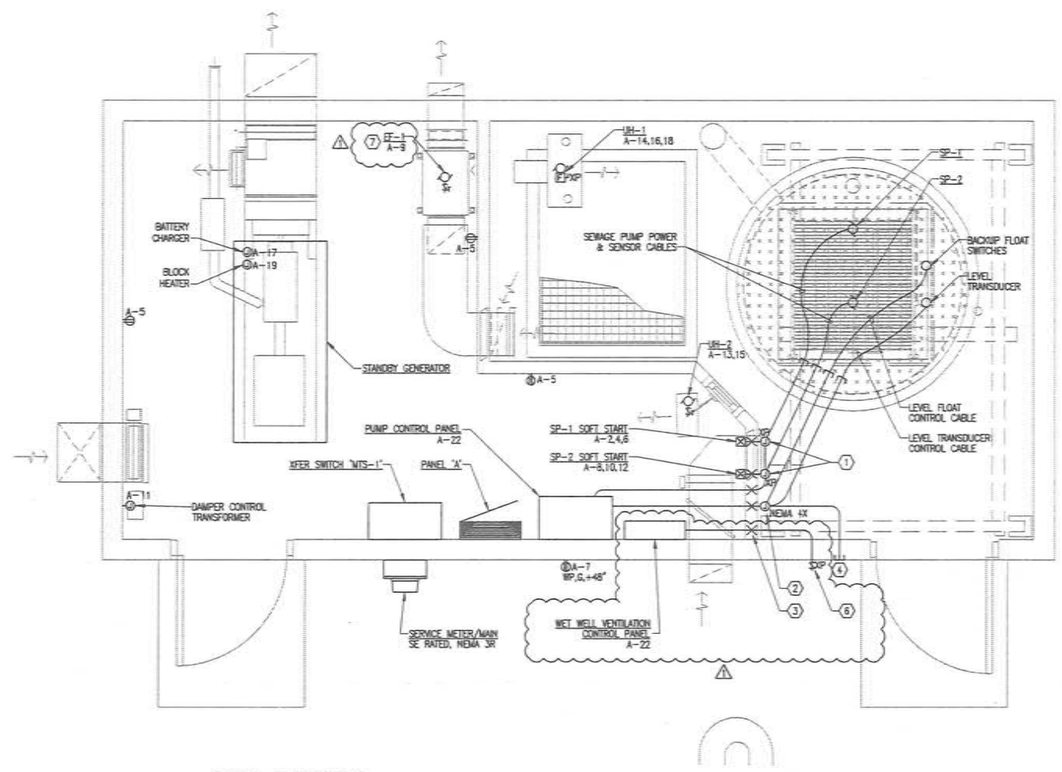

2 E5.1 LIFT STATION ELECTRICAL POWER PLAN
SCALE: 1/2" = 1'-0"

EIC ENGINEERS, INC
ELECTRICAL ENGINEERS
6927 OLD SEWARD HWY, SUITE 200
ANCHORAGE, AK 99518
T 907.349.9712
F 907.349.9713
www.eicengs.com
EIC JOB #810-1323

RECORD DRAWING CERTIFICATE
THESE DRAWINGS REFLECT RECORDED INFORMATION OBTAINED DURING CONSTRUCTION. INFORMATION PROVIDED HEREIN IS ACCURATE TO THE BEST OF MY KNOWLEDGE.
NAME DATE

SCALE: AS SHOWN

WILLOW SAFE WATER ALASKA

STATE OF ALASKA REGISTERED PROFESSIONAL ENGINEER ERIC D. CONNING No. EE-8743 01/11/11

2009 WASTEWATER SYSTEM IMPROVEMENTS
ELECTRICAL LIFT STATION PLANS
TULUKSAK, ALASKA

CE2 ENGINEERS, INC.
PO BOX 230946 ANCHORAGE, AK 99523 PH: 907.349.1010 FAX: 907.349.1015

REVISION	BY	DATE
WET WELL VENTILATION CONTROLS	BLS	11/09/11

Project No. ____
Date JAN 2011
Designed BLS
Drawn BLS
Approved EDC

Sheet No. E5.1

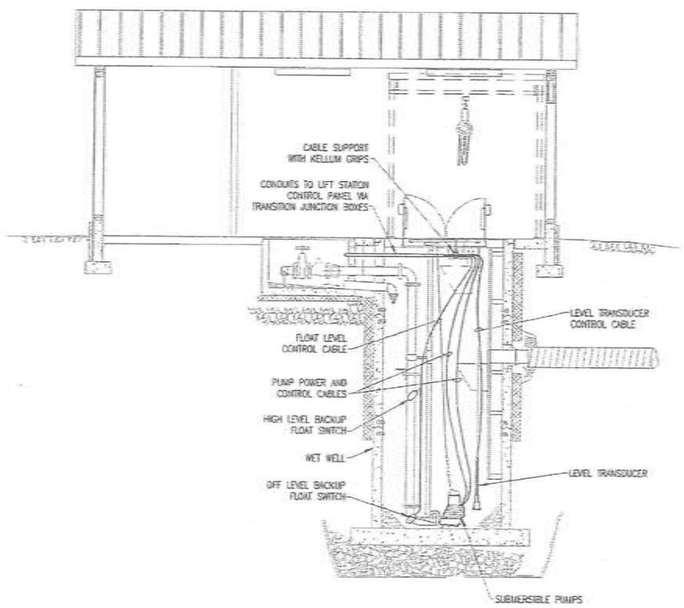

1 LIFT STATION WET WELL ELEVATION

E5.2 SCALE: 1/4" = 1'-0"

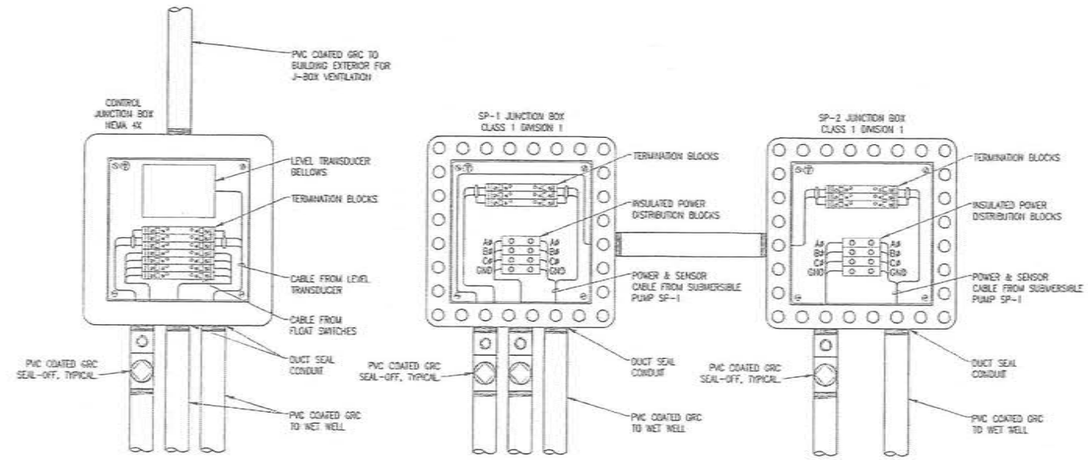

DETAIL NOTES

1. JUNCTION BOXES SHALL BE SIZED AS REQUIRED TO HOUSE TERMINATION COMPONENTS AND WIRING PER NEC.
2. ALL WIRING ROUTED THROUGH THE NEMA 4X CONTROL JUNCTION BOX SHALL BE INTRINSICALLY SAFE.

2 LIFT STATION TRANSITION JUNCTION BOX DETAIL

E5.2 SCALE: NONE

EIC ENGINEERS, INC
ELECTRICAL ENGINEERS
6927 OLD SEWARD HWY, SUITE 200
ANCHORAGE, AK 99518
T 907.349.9712
F 907.349.9713
www.eicengs.com
EIC JOB #810-1323

RECORD DRAWING CERTIFICATE
THESE DRAWINGS REFLECT RECORDED INFORMATION OBTAINED DURING CONSTRUCTION. INFORMATION PROVIDED HEREIN IS ACCURATE TO THE BEST OF MY KNOWLEDGE.
NAME DATE

SCALE:

BARR & LINE INSPECTOR (APPLICABLE FOR)

IF NOT FULL SIZE (24" X 36") ADJUST SCALES ACCORDINGLY

STATE OF ALASKA
ERIC S. CONNOR
No. EE-9713
08/15/11
REGISTERED PROFESSIONAL ENGINEER

2009 WASTEWATER SYSTEM IMPROVEMENTS
ELECTRICAL
LIFT STATION PLANS
TULUKSAK, ALASKA

CE2 ENGINEERS, INC.
PO BOX 230596 ANCHORAGE, AK 99523 PH: 907-346-1010 FAX: 907-346-1015

REVISION	BY	DATE

Project No.
Date JAN 2011
Designed BLS
Drawn BLS
Approved EDC

Sheet No.
E5.2

DETAIL EQUIPMENT

1. SERVICE METER/MAIN– SE RATED, NEMA 3R, 200A MAIN CB, 208Y/120V, 3ϕ, 4W. SQUARE D OR EQUIVALENT.
2. MANUAL TRANSFER SWITCH "MTS-1"– NEMA 1, 3-POLE, 200A, 208/120V, 3ϕ, 4W, ASCO OR EQUIVALENT.
3. PANEL "A"– NEMA 1, 225A, 208Y/120V, 3ϕ, 4W, 42 SPACE, SQUARE D TYPE MOOD OR EQUIVALENT. PROVIDE WITH TRANSIENT VOLTAGE SURGE SUPPRESSION (TVSS).
4. PUMP CONTROL PANEL– DUPLEX PUMP CONTROL PANEL (SEE SHEET E6.2)
5. SEWAGE PUMP SOFT START MOTOR STARTER– 10HP, 208V 3ϕ, IP20 ENCLOSURE PROGRAMMABLE PUMP CURVES DANFOSS OR EQUIVALENT (SEE SHEET E6.2)
6. STANDBY GENERATOR– 40KW/50KVA, 208Y/120V, 3ϕ, 4 WIRE DIESEL, WITH BASE TANK KOHLER OR EQUIVALENT

FEEDER SCHEDULE

FEEDER ID	RACEWAY QNTY	RACEWAY SIZE	CONDUCTORS	NOTES
5G	1	1"	(3)6 AWG, (1)10 AWG EGC	
100N	1	1-1/4"	(4)2 AWG, (1)8 AWG EGC	
150N	1	2"	(4)1/0 AWG, (1)6 AWG EGC	
200N	1	2"	(4)3/0 AWG, (1)6 AWG EGC	
PC1	1	1-1/2"	PUMP POWER & SENSOR CABLE	
TC1	1	3/4"	(1)16/2 TWSD, (4)12 AWG (FLOAT & LEVEL TRANSDUCER CONTROL WIRING)	2
TC2	1	1-1/2"	LEVEL TRANSDUCER CABLE	
TC3	1	1-1/2"	FLOAT SWITCH CABLE	
TC4	1	3/4"	(4)12 AWG (PUMP START/STOP & PHASE FAIL CONTROL WIRING)	2
TC5	1	1/2"	(2)16/2 TWSD (PUMP SENSOR CONTROL WIRING)	2
TC6	1	1/2"	(1)16/2 TWSD (PUMP SENSOR CONTROL WIRING)	2
SE	1	2"	CONDUIT ONLY	1
STANDARD NOTES				
A) ALL CONDUCTOR SIZES SHOWN ARE COPPER.				
REFERENCED NOTES				
1) CONDUIT STUB WITH WEATHER HEAD FOR OVERHEAD UTILITY CONNECTION.				
2) CONTRACTOR TO VERIFY CONTROL WIRING WITH ACTUAL EQUIPMENT SUPPLIED.				

PANEL "A" SCHEDULE

VOLTAGE: 208Y/120V, 3PH, 4W
BUS: 225
MAIN: FUSES ONLY – FED BY 225A CB
LOCATION: "LIFT STATION"
MIN. A.I.C. RATING: SEE NAME
ENCLOSURE: NEMA 1
MOUNTING: SURFACE

LOAD DESCRIPTION	NOTE	KVA	LOAD	AMP	P	CKT	ABC	CKT	AMP	P	LOAD DESCRIPTION	NOTE	KVA	LOAD
LTG-CONTROL ROOM		0.33	L	20	1	1	-	1	60	3	SP-1		11.10	M
LTG-EXTERIOR		0.07	L	20	1	2	-	4	-	-	-			-
REC-CONTROL ROOM		0.54	R	20	1	3	-	6	-	-	-			-
REC-EXTERIOR		0.18	R	20	1	5	-	8	60	3	SP-2		11.10	M
EF-1		0.20	M	20	1	7	-	10	-	-	-			-
MOTORIZED DAMPERS		0.10	C	15	1	9	-	12	-	-	-			-
WH-1		3.00	C	20	2	11	-	14	40	3	WH-1		10.00	C
		-	-	-	-	13	-	16	-	-	-			-
GENERATOR BATTERY CHARGER		1.20	C	20	1	15	-	18	-	-	-			-
GENERATOR BLOCK HEATER		1.50	C	20	1	17	-	20	-	-	-			-
SPARE				20	1	19	-	22	20	1	LTG-WET WELL		0.71	L
SPARE				20	1	21	-	24	20	1	PUMP CONTROL PANEL		0.75	R
SPARE				20	1	23	-	26	-	1	- SPACE -			
SPARE				20	1	25	-	28	-	1	- SPACE -			
SPARE				20	1	27	-	30	-	1	- SPACE -			
SPARE				20	1	29	-	32	-	1	- SPACE -			
- SPACE -					1	31	-	34	-	1	- SPACE -			
- SPACE -					1	33	-	36	-	1	- SPACE -			
- SPACE -					1	35	-	38	-	1	- SPACE -			
- SPACE -					1	37	-	40	-	1	- SPACE -			
- SPACE -					1	39	-	42	-	1	- SPACE -			
- SPACE -					1	41	-	43	-	1	- SPACE -			

SUMMARY BY LOAD TYPE	PH A	PH B	PH C	TFED	CONNECTED KVA	TOTAL KVA	NEC #	NEC TOTAL
G GENERAL LOADS						N/A		
A APPLIANCES						9.75		
E ELECTRIC RANGE						0.00		
L LIGHTING	0.5	0.1			0.6	1.25		0.7
R RECEPTACLES	0.2	0.3	0.5		1.0	10K+50%		1.0
M MOTORS	5.7	4.4	5.7		11.8	1.00		11.8
LM LARGEST MOTOR	3.7	3.7	3.7		11.1	1.25		13.9
C CONTINUOUS	5.3	4.8	4.8		15.0	1.25		18.8
N NON-CONTINUOUS						1.00		
S SPARE						1.00		
F NON-COINCIDENT						0.00		
K KITCHEN						1.00		
D DRYER						1.00		
O OTHER						1.00		
EXH EXIST'G TO REMAIN						1.25		
F FIXED						1.25		
TOTAL KVA (PHASE)	14.4	13.2	12.8		40.2			47.1
TOTAL AMPERES	119.9	110.3	106.7		111.7			130.7
PHASE BALANCE, ABC	A–B	B–C	C–A					
PERCENT	6.8%	3.0%	12.6%					

NOTES:
1. PROVIDE PANEL WITH TRANSIENT VOLTAGE SURGE SUPPRESSION (TVSS).

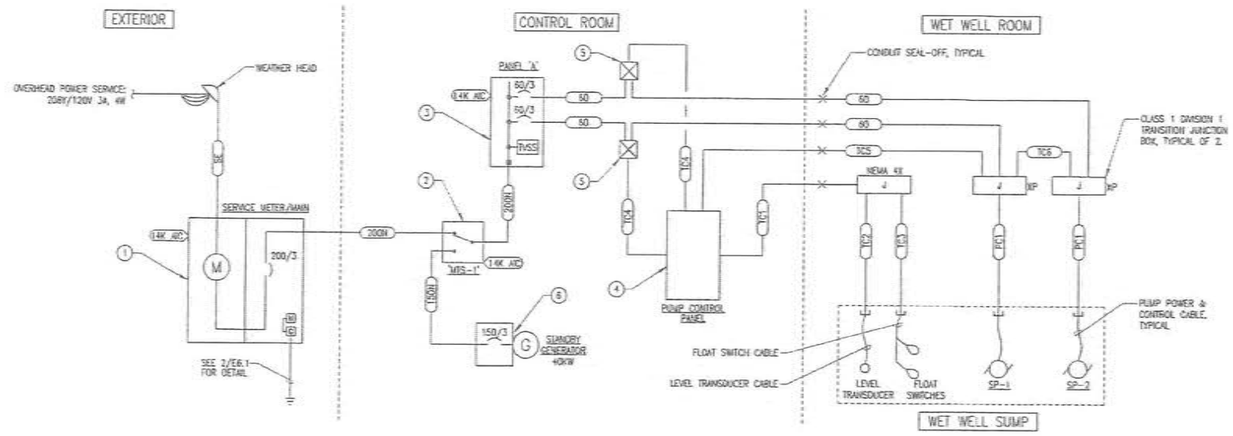

1 / E6.1 LIFT STATION POWER ONE-LINE DIAGRAM
SCALE: NONE

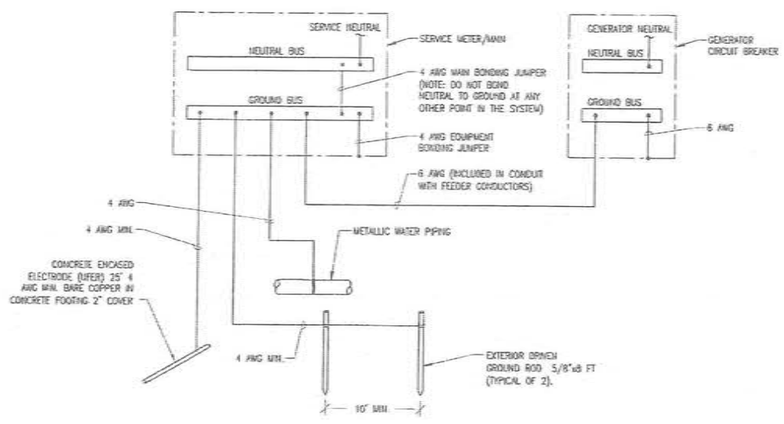

2 / E6.1 LIFT STATION GROUNDING DIAGRAM
SCALE: NONE

EIC ENGINEERS, INC
ELECTRICAL ENGINEERS
6927 OLD SEWARD HWY, SUITE 203
ANCHORAGE, AK 99518
T 907.349.9712
F 907.349.9713
www.eiceng.com
EIC JOB #636-1123

RECORD DRAWING CERTIFICATE
THESE DRAWINGS REFLECT RECORDED INFORMATION OBTAINED DURING CONSTRUCTION. INFORMATION PROVIDED HEREIN IS ACCURATE TO THE BEST OF MY KNOWLEDGE.
NAME
DATE

SCALE:

2009 WASTEWATER SYSTEM IMPROVEMENTS

ELECTRICAL
LIFT STATION
DIAGRAMS &
PANEL SCHEDULE

TULUKSAK, ALASKA

CE2 ENGINEERS, INC.
PO BOX 220246 ANCHORAGE, AK 99522 PH: 907-345-1818 FAX: 907-345-1015

REVISION	BY	DATE

Project No.
Date JAN 2011
Designed BLS
Drawn BLS
Approved EDC

Sheet No.
E6.1

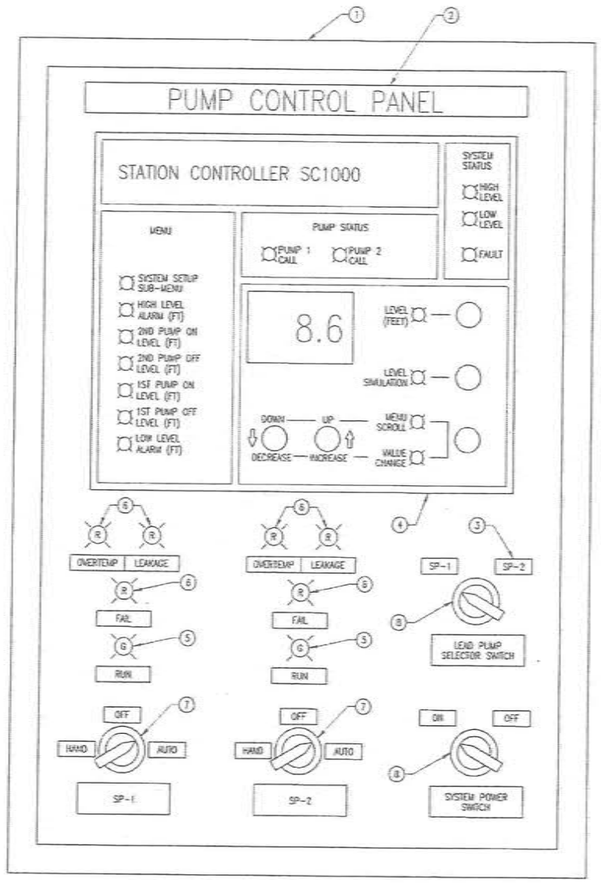

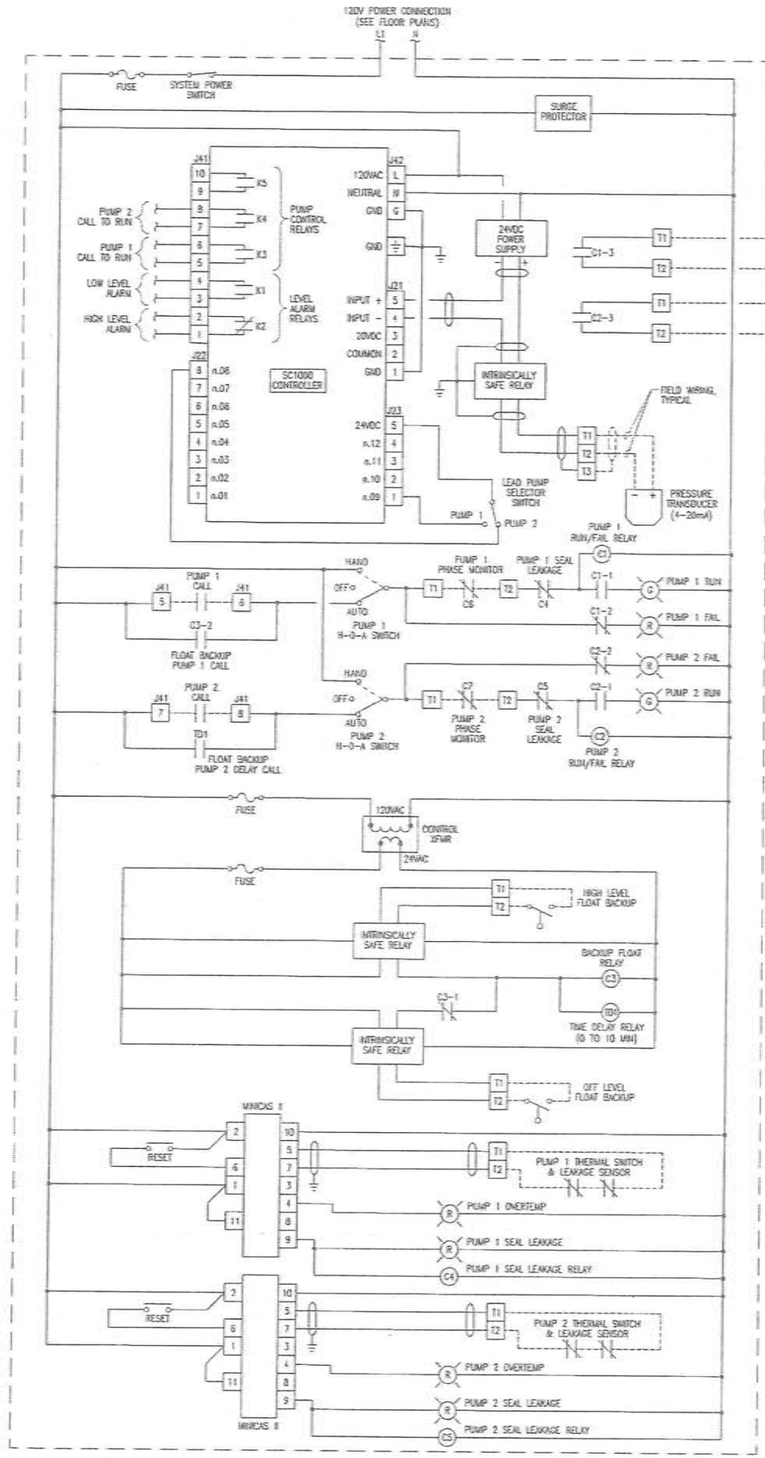

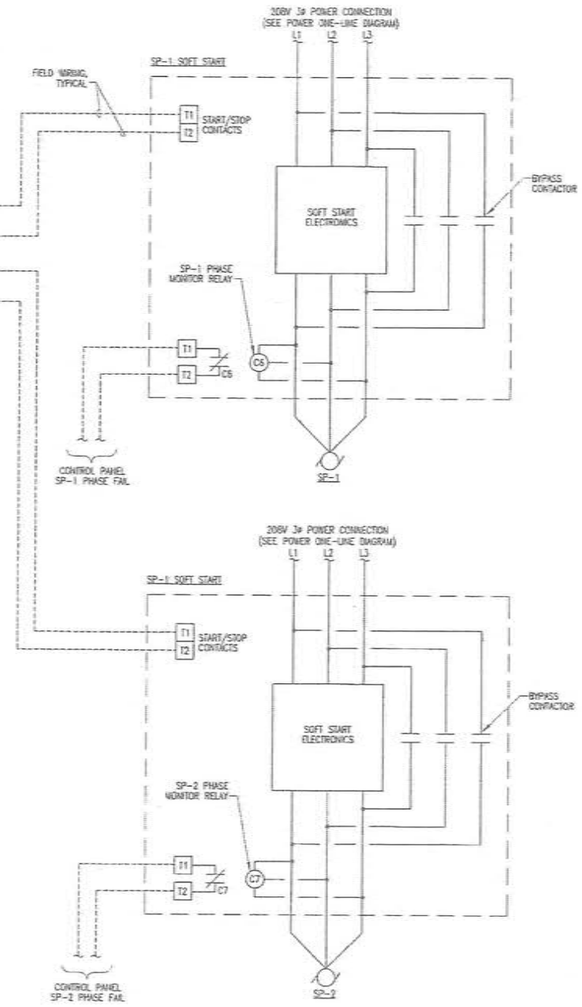

CONTROL PANEL COMPONENT SCHEDULE

ITEM	DESCRIPTION	NOTES
1	CONTROL PANEL ENCLOSURE- NEMA 4, SIZED ADEQUATE TO HOUSE COMPONENTS.	
2	NAME TAG- BLACK LAMINATED PLASTIC W/ WHITE CORE, SCREW MOUNTED, 1/2" ENGRAVED LETTERS	
3	NAME TAG- BLACK LAMINATED PLASTIC W/ WHITE CORE, SCREW MOUNTED, 1/4" ENGRAVED LETTERS	
4	DUPLEX PUMP CONTROLLER- MPE, INC STATION CONTROLLER SC1000	
5	PILOT LIGHT- 30mm, GREEN, LED, 120VAC, PUSH TO TEST TYPE, ALLEN BRADLEY 800T-PTH16G	
6	PILOT LIGHT- 30mm, RED, LED, 120VAC, PUSH TO TEST TYPE, ALLEN BRADLEY 800T-PTH16R	
7	SELECTOR SWITCH- 30mm, 3-POSITION MAINTAINED W/ TERMINAL BLOCKS & CAM SHOWN, ALLEN BRADLEY 800 SERIES	
8	SELECTOR SWITCH- 30mm, 2-POSITION MAINTAINED W/ TERMINAL BLOCKS & CAM SHOWN, ALLEN BRADLEY 800 SERIES	

STANDARD NOTES

A) CONTRACTOR TO PROVIDE PART NUMBERS SHOWN OR EQUIVALENT.

REFERENCED NOTES

1) NONE.

DETAIL NOTES

1. PUMP CONTROL PANEL SHALL BE COMPLETELY ENGINEERED, FABRICATED, WIRED, TESTED, AND READY FOR INSTALLATION. ALL WIRING SHALL BE CHECKED BY THE FABRICATOR FOR GROUNDS, SHORTS, AND CONTINUITY. ELECTRICAL DEVICES SHALL BE PUT THROUGH DUMMY OPERATIONS AT FABRICATOR'S SHOP WITH CONTROL VOLTAGE APPLIED.
2. PUMP CONTROL PANEL SHALL BE CONSTRUCTED PER NEMA STANDARD IC-1 INDUSTRIAL CONTROL, UNDERWRITERS LABORATORIES STANDARD UL 508, INDUSTRIAL CONTROL EQUIPMENT, AND THE NATIONAL ELECTRIC CODE PANEL SHALL BE UL OR ETL LISTED AS AN ASSEMBLY AND SHALL BEAR THE UL OR ETL LABEL.
3. ALL CONTROL WIRING SHALL BE MINIMUM 14 AWG UNLESS OTHERWISE NOTED. ALL POWER WIRING SHALL BE A MINIMUM OF 12 AWG. USE 600V WALTHINE TOOL 19 STRAND TYPE THHW WIRE.
4. SOLDER LESS TERMINALS SHALL BE USED AND EACH WIRE SHALL BE IDENTIFIED AT ALL TERMINATIONS WITH BRADY LABELS, OR EQUAL. TERMINAL BLOCKS SHALL BE SCREW TYPE, 10 AMPERE WITH WIRE DESIGNATIONS. THE TERMINAL BLOCKS SHALL BE ARRANGED TO PROVIDE AMPLE SPACE FOR CONNECTIONS.

1 PUMP CONTROL PANEL LAYOUT & CONTROL DIAGRAM
E6.2 SCALE: NONE

EIC ENGINEERS, INC
ELECTRICAL ENGINEERS
6927 OLD SEWARD HWY, SUITE 200
ANCHORAGE, AK 99518
T 907.349.9712
F 907.349.9713
www.eicengr.com
EIC JOB # E90-1323

RECORD DRAWING CERTIFICATE
THESE DRAWINGS REFLECT RECORDED INFORMATION OBTAINED DURING CONSTRUCTION. INFORMATION PROVIDED HEREIN IS ACCURATE TO THE BEST OF MY KNOWLEDGE.
NAME
DATE

SCALE:

REVISION	BY	DATE

2009 WASTEWATER SYSTEM IMPROVEMENTS
ELECTRICAL LIFT STATION CONTROLS
TULUKSAK, ALASKA

CE2 ENGINEERS, INC.
PO BOX 112094 ANCHORAGE AK 99511 Ph: 907.346.1818 FAX: 907.349.1818

Project No.
Date JAN 2011
Designed BLS
Drawn BLS
Approved EDC

Sheet No.
E6.2

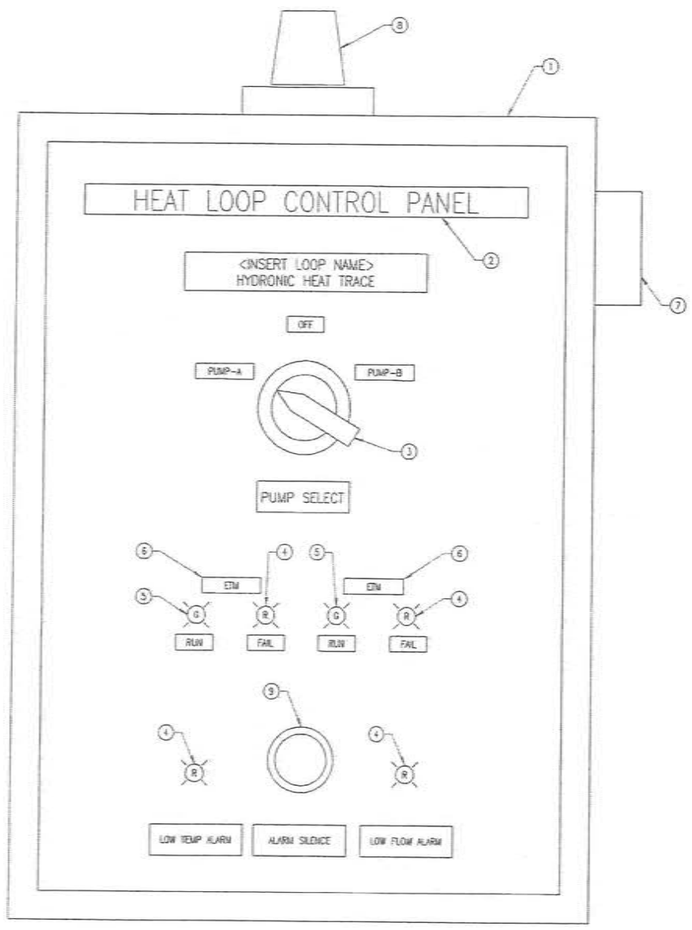

1 POWER PLANT GLYCOL HEAT LOOP PUMP CONTROL PANEL

E6.3 SCALE: NONE

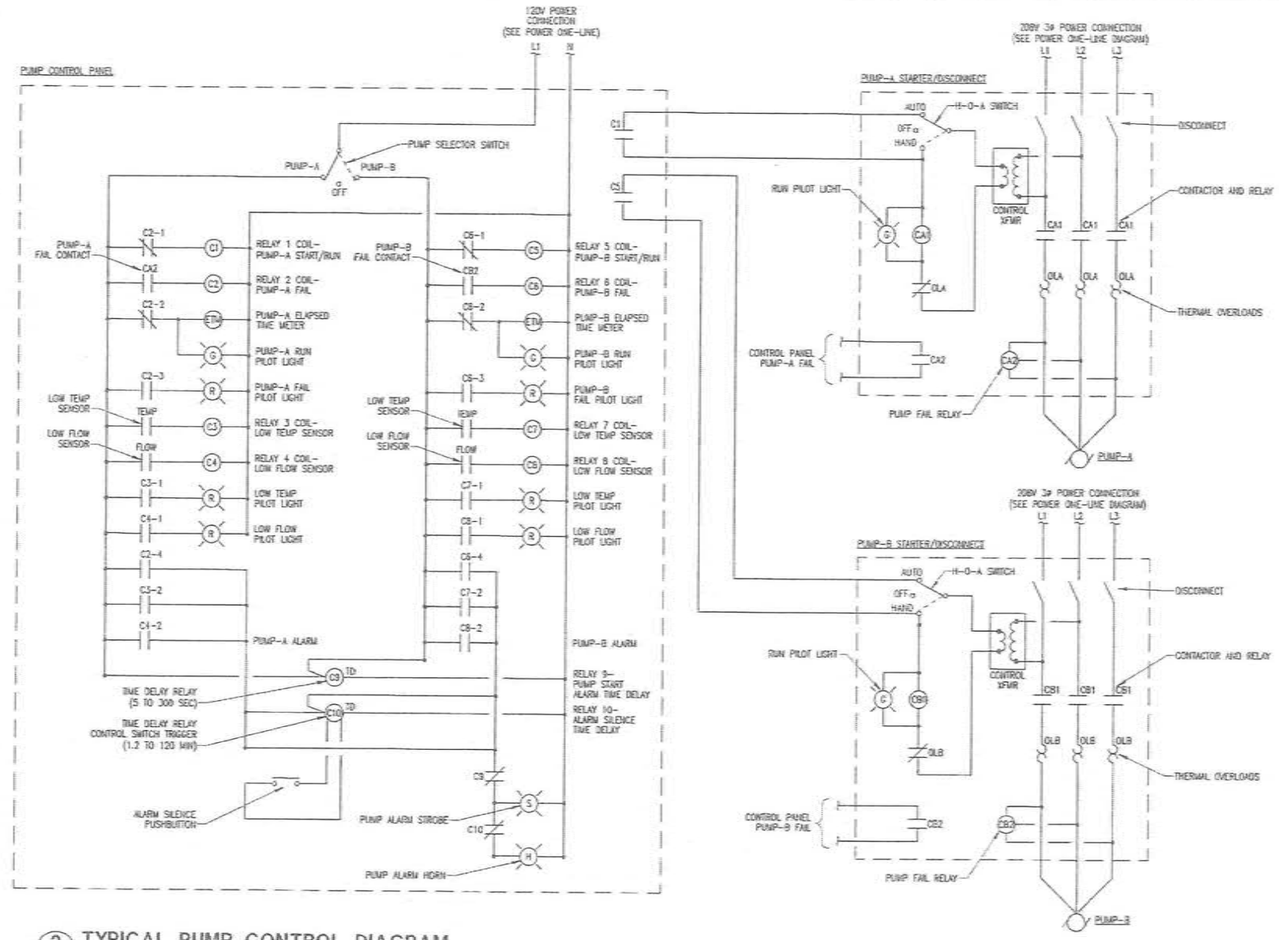

2 TYPICAL PUMP CONTROL DIAGRAM

E6.3 SCALE: NONE

HEAT LOOP CONTROL PANEL COMPONENT SCHEDULE

ITEM	DESCRIPTION	NOTES
1	CONTROL PANEL ENCLOSURE- NEMA 3R, SIZED AS ADEQUATE TO HOUSE COMPONENTS	
2	NAME TAG- BLACK LAMINATED PLASTIC W/ WHITE CORE, SCREW MOUNTED, 1/4" (1/2" FOR FRONT DOOR ONLY) ENGRAVED LETTERS	
3	SELECTOR SWITCH- 30mm, 3-POSITION MAINTAINED W/ TERMINAL BLOCKS & CAM SHOWN	
4	PILOT LIGHT- 18mm, RED, LED, 120VAC, PUSH TO TEST TYPE, ALLEN BRADLEY 800T-PSH16R	
5	PILOT LIGHT- 18mm, GREEN, LED, 120VAC, PUSH TO TEST TYPE, ALLEN BRADLEY 800T-PSH16G	
6	ELAPSE TIME METER- HOUR METER, NON-RESETTABLE, 99999.9 HOUR REGISTER, HOBBS #20017	
7	ALARM HORN- 120VAC, WEATHERPROOF, CAST BACK BOX	
8	ALARM STROBE- 120VAC, WEATHERPROOF, CASE BACK BOX, AMBER LENS	
9	ALARM SILENCE PUSHBUTTON- MOMENTARY SWITCH, 120VAC, RED	

STANDARD NOTES

A) CONTRACTOR TO PROVIDE PART NUMBERS SHOWN OR EQUIVALENT.

REFERENCED NOTES

1) NONE

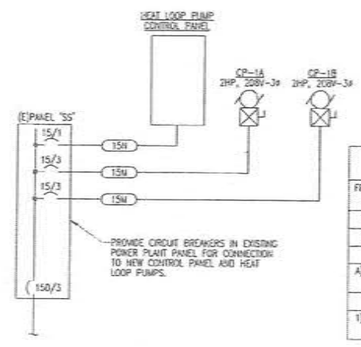

FEEDER SCHEDULE

FEEDER ID	RACEWAY ONLY	RACEWAY SIZE	CONDUCTORS	NOTES
15M	1	1/2"	(2)12 AWG, (1)12 AWG EGC	
15M	1	1/2"	(3)12 AWG, (1)12 AWG EGC	

STANDARD NOTES

A) ALL CONDUCTOR SIZES SHOWN ARE COPPER.

REFERENCED NOTES

1) NONE

PANEL 'SS' LOAD SUMMARY

EXISTING LOAD

PANEL 'SS' LOAD (FROM ASBUILTS) = 37.0 KVA

NEW LOAD

CP-1A/B = 2.70 KVA

HEAT LOOP PUMP CONTROL PANEL = 0.75 KVA

25% LARGEST MOTOR = 0.68 KVA

41.13TOTAL KVA

CALCULATED CURRENT = 114.2 AMPS @ 208 V, 3 PHASE

EXISTING 150 A, 208 V, 3 PHASE, 4 WIRE PANEL IS ADEQUATE

3 POWER PLANT POWER ONE-LINE DIAGRAM

E6.3 SCALE: NONE

EIC ENGINEERS, INC
ELECTRICAL ENGINEERS
6937 OLD SEWARD HWY, SUITE 200
ANCHORAGE, AK 99518
T 907.349.9712
F 907.349.9713
www.eiceng.com
EIC ICS #E10-1233

RECORD DRAWING CERTIFICATE

THESE DRAWINGS REFLECT RECORDED INFORMATION OBTAINED DURING CONSTRUCTION. INFORMATION PROVIDED HEREIN IS ACCURATE TO THE BEST OF MY KNOWLEDGE.

NAME DATE

SCALE:

IF NOT ONE INCH ON THIS SHEET, ADJUST SCALES ACCORDINGLY

2009 WASTEWATER SYSTEM IMPROVEMENTS

ELECTRICAL POWER PLANT CONTROLS & DIAGRAMS

TULUKSAK, ALASKA

CE2 ENGINEERS, INC.
PO BOX 230944 ANCHORAGE, AK 99523 PH: 907.349.1010 FAX: 907.349.1015

REVISION	BY	DATE

Project No. ____ Date JAN 2011 Designed BLS Drawn BLS Approved BDC

Sheet No. E6.3

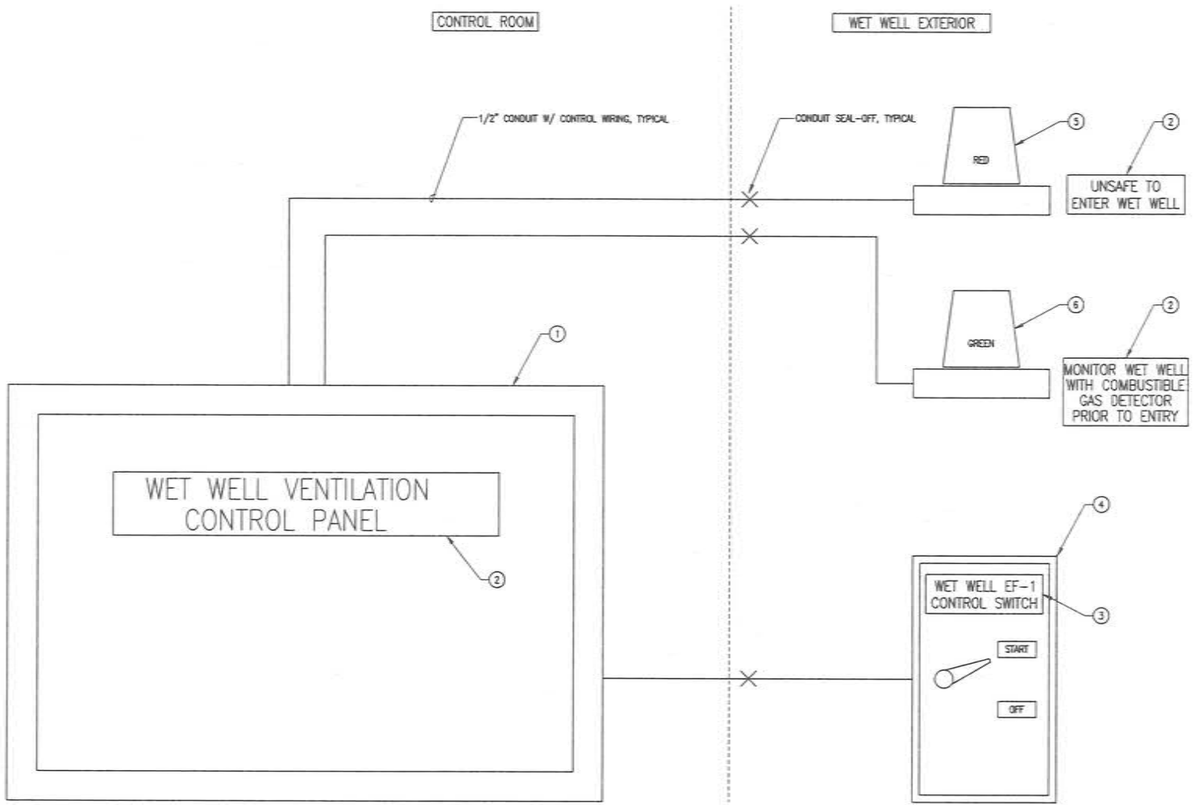

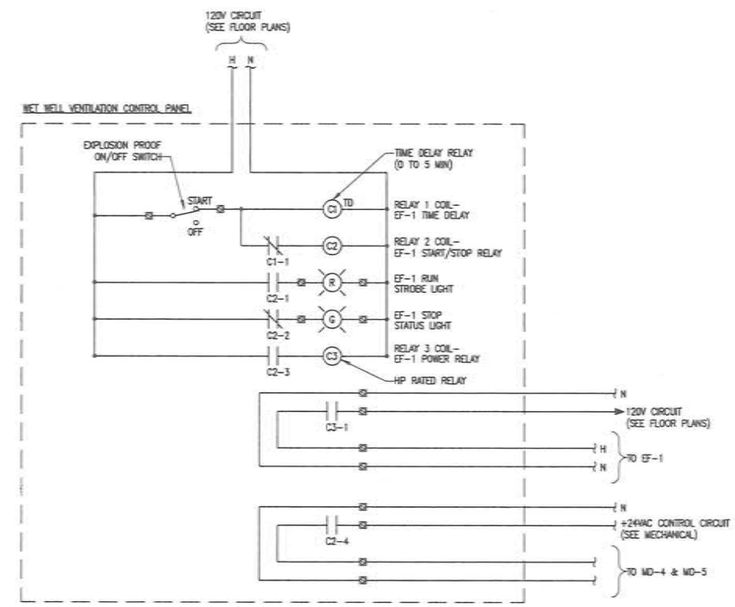

CONTROL PANEL COMPONENT SCHEDULE

ITEM	DESCRIPTION	NOTES
1	CONTROL PANEL ENCLOSURE– NEMA 4, SIZED ADEQUATE TO HOUSE COMPONENTS.	
2	NAME TAG– BLACK LAMINATED PLASTIC W/ WHITE CORE, SCREW MOUNTED, 1/2" ENGRAVED LETTERS	
3	NAME TAG– BLACK LAMINATED PLASTIC W/ WHITE CORE, SCREW MOUNTED, 1/4" ENGRAVED LETTERS	
4	2–POSITION CLASS 1 DIVISION 2 EXPLOSION PROOF SELECTOR SWITCH	
5	RED CLASS 1 DIVISION 2 EXPLOSION PROOF STROBE LIGHT, RATED –40° F	
6	GREEN CLASS 1 DIVISION 2 EXPLOSION PROOF STATUS LIGHT, RATED –40° F	

STANDARD NOTES

A) CONTRACTOR TO SELECT EXACT EQUIPMENT UTILIZED.

REFERENCED NOTES

1) NONE.

DETAIL NOTES

1. CONTROL PANEL SHALL BE COMPLETELY ENGINEERED, FABRICATED, WIRED, TESTED, AND READY FOR INSTALLATION. ALL WIRING SHALL BE CHECKED BY THE FABRICATOR FOR GROUNDS, SHORTS, AND CONTINUITY. ELECTRICAL DEVICES SHALL BE PUT THROUGH DUMMY OPERATIONS AT FABRICATOR'S SHOP WITH CONTROL VOLTAGE APPLIED.
2. PUMP CONTROL PANEL SHALL BE CONSTRUCTED PER NEMA STANDARD IC–1 INDUSTRIAL CONTROL, UNDERWRITERS LABORATORIES STANDARD UL 508, INDUSTRIAL CONTROL EQUIPMENT, AND THE NATIONAL ELECTRIC CODE. PANEL SHALL BE UL OR ETL LISTED AS AN ASSEMBLY AND SHALL BEAR THE UL OR ETL LABEL.
3. ALL CONTROL WIRING SHALL BE MINIMUM 14 AWG UNLESS OTHERWISE NOTED. ALL POWER WIRING SHALL BE A MINIMUM OF 12 AWG. USE 600V MACHINE TOOL 19 STRAND TYPE XHHW WIRE.
4. SOLDER LESS TERMINALS SHALL BE USED AND EACH WIRE SHALL BE IDENTIFIED AT ALL TERMINATIONS WITH BRADY LABELS, OR EQUAL. TERMINAL BLOCKS SHALL BE SCREW TYPE, 20 AMPERE WITH WIRE DESIGNATIONS. THE TERMINAL BLOCKS SHALL BE ARRANGED TO PROVIDE AMPLE SPACE FOR CONNECTIONS.

1 WET WELL VENTILATION CONTROL PANEL LAYOUT & CONTROL DIAGRAM

E6.4 SCALE: NONE

EIC ENGINEERS, INC
ELECTRICAL ENGINEERS
6927 OLD SEWARD HWY, SUITE 200
ANCHORAGE, AK 99518
T 907.349.9712
F 907.349.9713
www.eiceng.com
EIC JOB #E10-1323

RECORD DRAWING CERTIFICATE
THESE DRAWINGS REFLECT RECORDED INFORMATION OBTAINED DURING CONSTRUCTION. INFORMATION PROVIDED HEREIN IS ACCURATE TO THE BEST OF MY KNOWLEDGE.
NAME DATE

SCALE: AS SHOWN

BAR IS ONE INCH ON ORIGINAL DRAWING 0 1"
IF NOT ONE INCH ON THIS SHEET, ADJUST SCALE ACCORDINGLY

STATE OF ALASKA 49TH ERIC G. CONNING No. EE-9733 01/11/11 REGISTERED PROFESSIONAL ENGINEER

2009 WASTEWATER SYSTEM IMPROVEMENTS
ELECTRICAL POWER PLANT CONTROLS & DIAGRAMS
TULUKSAK, ALASKA

CE2 ENGINEERS, INC.
PO BOX 220246 ANCHORAGE, AK 99522 PH: 907.349.1019 FAX: 907.349.1015

REVISION	BY	DATE
△1 WET WELL VENTILATION CONTROLS	BLS	11/08/11

Project No. ___
Date JAN 2011
Designed BLS
Drawn BLS
Approved EDC

Sheet No. E6.4