Division of Water
Anchorage
JUN 2 2 2006
RECEIVED

TOO'GHA INC. – TANANA, ALASKA

WATER DISTRIBUTION & WASTEWATER COLLECTION SYSTEM

MAY 2001

ISSUED FOR CONSTRUCTION

In Cooperation with the State of Alaska
Department of Environmental Conservation
Village Safe Water Program

NOTES:
1. FIELD NOTES SHOULD BE RESEARCHED ALONG WITH THE PLAN INFORMATION, IN ANY FUTURE DIGGING, OR DESIGNING.
2. TEXT ONLY WAS CHANGED. DESIGN WAS NOT CHANGED. △

STATE OF ALASKA 49TH GREGORY L. MAGEE CE-7974 REGISTERED PROFESSIONAL ENGINEER

PROJECT MANAGER

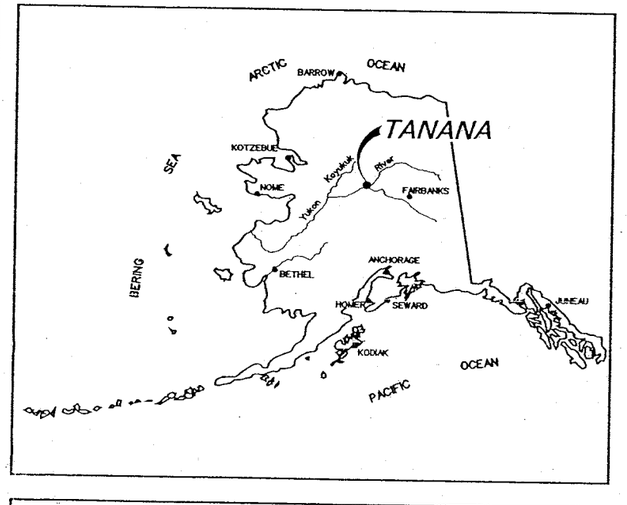

Location Map

MONTGOMERY WATSON

IN ASSOCIATION WITH

EDC, INC.
213 W. Fireweed Ln.
Anchorage, AK 99503

Consultant

RECORD DRAWING CERTIFICATE

STATE OF ALASKA 49TH ALLYN E. YOAKUM No. CE 4542 REGISTERED PROFESSIONAL ENGINEER

THESE DRAWINGS REFLECT RECORDED INFORMATION OBTAINED DURING CONSTRUCTION.
INFORMATION PROVIDED HEREIN IS ACCURATE TO THE BEST OF MY KNOWLEDGE.

ALLYN E YOAKUM — NAME
6/16/06 — DATE

Project Number (Consultant) 1189073.010102 (VSW) 82704
VSW Project Engineer LYNN MARINO
Construction Foreman JEROME WILBER / EARL THEROUX
Final Design (Date) 7-14-00
ADEC Approval (Date) 9-27-00
Construction Period (From) 2001 (To) 2005
As-Builts (Date) 2005, 2006

SHEET INDEX

No.	Title
	COVER SHEET AND SHEET INDEX
G–1	GENERAL NOTES
G–2	EXISTING UTILITIES
G–3	WATER AND SEWER KEY MAP
G–4	SEWER KEY MAP
G–5	WATER KEY MAP
G–6	UTILITY SERVICE CONNECT KEY MAP (WEST SIDE)
G–7	UTILITY SERVICE CONNECT KEY MAP (WEST SIDE)
G–8	SOIL TEST HOLE KEY MAP
G–9	SOIL TEST HOLE LOGS (TH1–TH12)
G–10	SOIL TEST HOLE LOGS (TH13–TH18)
C–1	A – LINE SEWER AND WATER PLAN AND PROFILE
C–2	B – LINE SEWER AND WATER PLAN AND PROFILE
C–3	B – LINE SEWER AND WATER PLAN AND PROFILE
C–4	C – LINE AND D – LINE SEWER AND WATER PLAN AND PROFILE
C–5	E – LINE & TRANSMISSION LINE (south end) SEWER AND WATER PLAN AND PROFILE
C–6	F – LINE SEWER AND WATER PLAN AND PROFILE
C–7	G – LINE SEWER AND WATER PLAN AND PROFILE
C–8	G – LINE SEWER AND WATER PLAN AND PROFILE
C–9	H – LINE AND I – LINE SEWER AND WATER PLAN AND PROFILE
C–10	J – LINE SEWER AND WATER PLAN AND PROFILE
C–11	K – LINE SEWER AND WATER PLAN AND PROFILE
C–12	L – LINE SEWER AND WATER PLAN AND PROFILE
C–13	M – LINE SEWER AND WATER PLAN AND PROFILE
C–14	N – LINE WATER AND SEWER PLAN AND PROFILE
C–15	O – LINE WATER AND SEWER PLAN AND PROFILE
C–16	FORCEMAIN SEWER LINE (north end) PLAN AND PROFILE
C–17	WEST WATER LOOP (between B–line and C–line) PLAN AND PROFILE
C–18	TRENCH SECTIONS
C–19	TRENCH SECTIONS
C–20	PIPE SECTIONS
C–21	PIPE JOINT DETAILS
C–22	MAINLINE PIPE FITTING DETAILS
C–23	SERVICE LINE PIPE FITTING DETAILS
C–24	SERVICE CONNECT DETAILS
C–25	FIRE HYDRANT AND WATER MAIN ALIGNMENT DETAILS
C–26	SEWER MANHOLE DETAILS
C–27	LIFT STATION WET WELL DETAILS
C–28	LIFT STATION BUILDING DETAILS
E–1	HEAT TRACE PLAN
E–2	HEAT TRACE ONE–LINE & DETAILS
E–3	LIFT STATION EQUIPMENT PLAN
E–4	CONTROL PANEL LAYOUT & SCHEMATIC
E–5	ELECTRICAL DETAILS
E–6	ELECTRICAL HOUSE SERVICE DETAILS

JOB No. 2922.0030 08-JUN-2006 16:47 FILE: C:\Proj\tanana\ws_lines\cpbit-2006\COVER.DGN

DETAIL AND SECTION CALLOUT EXPLANATION

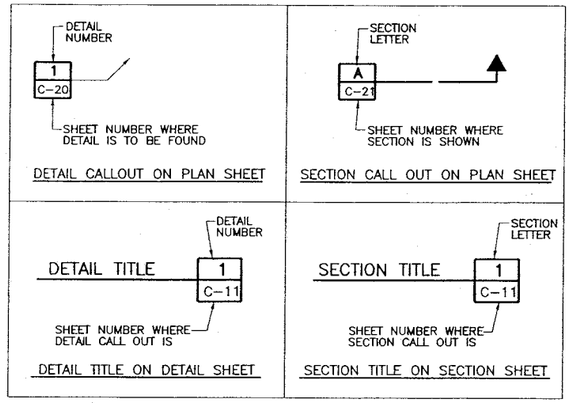

LIST OF ABBREVIATIONS

ABS	ACRYLONITRILE BUTADIENE STYRENE
BOP	BOTTOM OF PIPE
℄	CENTER LINE
CI	CAST IRON
CO	CLEAN OUT
DI	DUCTILE IRON
DIA	DIAMETER
E	EAST, EASTING
EL	ELEVATION
EQ	EQUAL
EXIST	EXISTING
F	FUEL LINE
FF EL	FINISH FLOOR ELEVATION
FM	FORCE MAIN
GRND	GROUND
HDPE	HIGH DENSITY POLYETHYLENE
HORIZ	HORIZONTAL
ID	INSIDE DIAMETER
INV	INVERT
LB	POUND
LF	LINEAR FOOT
LS	LIFT STATION
MAX	MAXIMUM
MH	MANHOLE
MIN	MINIMUM
N	NORTH, NORTHING
NO	NUMBER
OD	OUTSIDE DIAMETER
PPM	PARTS PER MILLION
PSI	POUNDS PER SQUARE INCH
S	SEWER, SLOPE, SOUTH
SDR	STANDARD DIMENSION RATIO
SIM	SIMILAR
SQ FT	SQUARE FEET
STA	STATION
T	TELEPHONE LINE
TH	TEST HOLE
TYP	TYPICAL
W	WATER LINE, WEST
W/	WITH
WHS/R	WASTE HEAT SUPPLY AND RETURN
WTP	WATER TREATMENT PLANT

SEE ELECTRICAL SHEET E-1 FOR ELECTRICAL ABBREVIATIONS AND LEGEND

SUMMARY OF WORK

THIS PROJECT INCLUDES PIPED WATER DISTRIBUTION AND WASTEWATER COLLECTION SYSTEMS FOR THE TOWNSITE OF TANANA, WEST OF EAMOLE STREET. THE WATER DISTRIBUTION SYSTEM CONSISTS OF 2 CIRCULATING LOOPS. THE WASTEWATER COLLECTION SYSTEM CONSISTS OF GRAVITY SEWER, 3 LIFT-STATIONS, AND A SEWER FORCEMAIN TO THE EXISTING LAGOON. WORK PRIOR TO THIS PHASE INCLUDED THE WATER TREATMENT / LAUNDRY FACILITY, A RESERVOIR, AND WATER DISTRIBUTION PUMPS WITHIN THE FACILITY. THIS WORK PHASE COMPLETES THE CIRCULATING WATER TRANSMISSION LINE BETWEEN THE WELL (CONSTRUCTED IN 1998) AND THE WATER TREATMENT PLANT FACILITY.

GENERAL NOTES:

1. ALL CONSTRUCTION SHALL BE DONE IN A WORKMANLIKE MANNER AND IN CONFORMANCE WITH APPLICABLE CODES, AND ADEC REGULATIONS AND PERMIT CONDITIONS.

2. THE SURVEY FOR THIS PROJECT WAS PREPARED BY MANLEY LAND SURVEYORS, INC. DATED SEPTEMBER 1997. THE BASIS OF HORIZONTAL CONTROL IS A PAIR OF BLM MONUMENTS, LOCATED ON THE NORTHEAST AND SOUTHEAST CORNERS OF LOT 1 OF THE U.S. SURVEY NO. 10815, ALASKA JUNE 2, 1994, MARKING THE LENGTH OF 207.9 FEET AND BEARING OF N 0°03' E. COORDINATES ARE SET TO N 10,000.00, E 10,000.00 AT THE SOUTHEAST CORNER MONUMENT. BASIS OF VERTICAL CONTROL IS THE TBM LOCATED AT TOP OF A SPIKE IN THE POWER POLE LOCATED NEAR INTERSECTION OF MILL STREET AND THIRD AVENUE TAKEN AS ELEVATION 96.56 FEET ABOVE AN ASSUMED ELEVATION. HORIZONTAL AND VERTICAL CONTROL SHALL BE RE-ESTABLISHED PRIOR TO START OF CONSTRUCTION.

3. RECORD DRAWINGS – THE PROJECT FOREMAN SHALL BE RESPONSIBLE FOR MAINTAINING A CLEAN SET OF DRAWINGS AT THE PROJECT OFFICE FOR RECORD INFORMATION. ALL REQUIRED INFORMATION SHALL BE RECORDED NEAT AND LEGIBLE IN RED PENCIL DAILY.THE PROJECT FOREMAN SHALL RECORD ON THE RECORD DRAWINGS ALL INFORMATION LISTED IN PARAGRAPH VIII.B. OF ADEC VSW SANITATION FACILITIES CONSTRUCTION PROJECT SUPERINTENDENT'S MANUAL DATED JULY 1998. ALL ELEVATIONS ANDDISTANCES SHOWN ON THE PLANS SHALL BE MARKED R (RECORD) OR F.C. (FIELD CHANGE) WITH THE CORRECT VALUE INSERTED. ALL SURVEY NOTES SHALL BE KEPT IN GOOD QUALITY FIELD BOOKS SUBMITTED TO THE OWNER WITH THE RECORD DRAWINGS AT THE END OF THE PROJECT.

4. UTILITY EASEMENTS – ALL WATER AND SEWER MAIN LINES SHALL BE

   INSTALLED WITHIN PUBLIC RIGHTS-OF-WAY OR DEDICATED UTILITY EASEMENTS. ALL TEMPORARY CONSTRUCTION EASEMENTS NEEDED SHALL BE THE RESPONSIBILITY OF THE OWNER.

5. HISTORICAL PRESERVATION – SHOULD ANY ARCHAEOLOGICAL, CULTURAL OR PALEONTOLOGICAL RESOURCES BE DISCOVERED AS A RESULT OF CONSTRUCTION ACTIVITY, WORK THAT WOULD DISTURB SUCH RESOURCES WILL BE STOPPED AND THE STATE HISTORIC PRESERVATION OFFICE AND THE TANANA TRIBAL COUNCIL BE CONTACTED IMMEDIATELY.

6. GENERAL RESTORATION – THE AREAS IMPACTED BY CONSTRUCTION SHALL BE RETURNED TO PRE-CONSTRUCTION CONDITION OR BETTER. DISTURBED AREAS OUTSIDE THE TRAVELED WAY SHALL BE GROOMED AND SEEDED TO MATCH SURROUNDING TERRAIN. DISTURBED AREAS WITHIN THE TRAVELED WAY SHALL BE RESURFACED PER THE DRAWINGS. CONSTRUCTION DEBRIS SHALL BE REMOVED FROM THE AREA AND DISPOSED AS DIRECTED BY THE OWNER. DUE CARE AND CAUTION SHALL BE TAKEN TO AVOID DISTURBING PERSONAL PROPERTY.

7. BARRICADES AND WARNING SIGNS SHALL BE PROVIDED TO ADVISE RESIDENTS OF ROAD CLOSURES, DETOURS, AND HAZARDOUS OPEN TRENCH CONDITIONS.

8. SEEDING – ALL DISTURBED AREAS OUTSIDE TRAVELED WAYS SHALL BE FERTILIZED AND SEEDED UPON COMPLETION OF FINAL GRADING. AN 8-32-16 (NITROGEN-PHOSPHORUS-POTASSIUM) FERTILIZER MIX SHALL BE APPLIED AT A RATE OF 15 POUNDS PER 1,000 SQUARE FEET AND WORKED INTO SURFACE SOILS. SEED SHALL BE 95 PERCENT PURE WITH A MINIMUM GERMINATION RATE OF 85 PERCENT AND SHALL CONFORM TO THE FOLLOWING:

NAME	APPLICATION RATE IN LB/1,000 SQ.FT.
ARCTARED RED FESCUE	1.5
"NUGGET" BLUEGRASS	1.0

   SEED SHALL BE UNIFORMLY MIXED AND MECHANICALLY SPREAD. SEEDING SHALL BE PERFORMED NO EARLIER THAN MAY 15TH AND NO LATER THAN AUGUST 15TH. SEEDING SHALL NOT BE PERFORMED DURING WINDY CONDITIONS OR WHEN CLIMATIC OR GROUND CONDITIONS WOULD HINDER PLACEMENT OR PROPER GROWTH.

EARTH WORK

1. WORK PRIOR TO EXCAVATION – CLEARING AND GRUBBING OF CERTAIN AREAS PRIOR TO EXCAVATION MAY BE NECESSARY. DISPOSE OF VEGETATION AND ORGANIC MATERIAL AS DIRECTED BY THE OWNER.

2. SAFETY CONSIDERATIONS – SIDEWALLS OF TRENCHES OR EXCAVATIONS SHALL BE SLOPED OR SUFFICIENTLY BRACED IN CONFORMANCE WITH ALASKA DEPARTMENT OF LABOR STANDARDS TO PROVIDE A SAFE WORKING ENVIRONMENT. ALL TRENCHES SHALL BE BACKFILLED OR COVERED BEFORE WORK IS STOPPED FOR THE DAY. OPEN EXCAVATIONS SHALL BE ADEQUATELY SIGNED AND BARRICADED TO WARN RESIDENTS OF THE HAZARD. TAKE ALL REASONABLE AND PRACTICAL MEASURES TO PROTECT PUBLIC HEALTH AND SAFETY AND PRIVATE PROPERTY.

3. SURFACE WATER/GROUNDWATER CONTROL – TRENCH BOTTOM SHALL BE MAINTAINED IN RELATIVELY DRY CONDITION DURING THE PIPE LAYING OPERATION. SURFACE DRAINAGE SHALL BE DIRECTED AWAY FROM THE TRENCH THROUGH USE OF DIVERSION BERMS OR OTHER APPROPRIATE MEASURES. USE OF PUMPING EQUIPMENT MAY BE REQUIRED IN SOME AREAS FOR TRENCH DEWATERING. DISCHARGE FROM DEWATERING OPERATIONS SHALL BE RETURNED TO NATURAL DRAINAGE ROUTES. SETTLING PITS, STRAW DIKES, OR OTHER APPROPRIATE MEASURES SHALL BE TAKEN TO PREVENT HIGHLY TURBID WATERS FROM ENTERING EXISTING LAKES, STREAMS, OR WETLANDS.

4. EXCAVATED UNUSABLE MATERIAL – DISPOSAL OF UNUSABLE EXCAVATED MATERIAL SHALL BE AS DIRECTED BY OWNER.

5. OVER EXCAVATION – OVER EXCAVATION SHALL BE UNDERTAKEN IN ACCORDANCE WITH THE DRAWINGS WHENEVER ICE RICH FROZEN SOILS, SATURATED THAWED SOILS OR ORGANIC RICH SOILS ARE ENCOUNTERED WITHIN THE LIMITS OF EXCAVATION.

6. PIPE TRENCH MATERIAL SPECIFICATION

   LEVELING COURSE: SHALL MEET THE FOLLOWING GRADATION REQUIREMENTS:

SIEVE DESIGNATION	% PASSING BY WEIGHT
1-1/2"	100
1"	70-100
3/4"	69-90
3/8"	50-80
#4	30-65
#8	25-55
#40	10-30
#200	4-10

   PIPE BEDDING MATERIAL: GRAVEL AND COARSE SAND WITH 1" MAXIMUM PARTICLE SIZE AND 6% MAXIMUM PASSING THE NO. 200 SIEVE.

   SELECT MATERIAL: GRAVEL AND COARSE SAND WITH 3" MAXIMUM PARTICLE SIZE AND 6% MAXIMUM PASSING THE NO. 200 SIEVE.

   NON-CLASSIFIED MATERIAL: MAY CONSIST OF EXCAVATED NATIVE MATERIAL PROVIDED IT IS FREE OF CONSTRUCTION DEBRIS, BOULDERS OR COBBLES, ORGANIC AND FROZEN MATERIALS.

EXTERIOR PIPING

1. GRADE AND ALIGNMENT – SURVEYING EQUIPMENT SHALL BE USED TO TRANSFER GRADES FROM ESTABLISHED CONTROL POINTS.

   QUALIFIED PERSONNEL SHALL OPERATE SURVEY EQUIPMENT AND MAINTAIN SURVEY NOTES TO BE SUBMITTED TO THE OWNER WITH THE RECORD DRAWINGS AT THE END OF THE PROJECT.

2. PIPE SHALL BE LIFTED AND PLACED USING PIPE SLINGS LOCATED TO PREVENT DAMAGE TO THE PIPE. THE PIPE SLINGS SHALL BE CONSTRUCTED OF NYLON OR OTHER SUITABLE MATERIALS WHICH WILL NOT GOUGE, TEAR, PUNCTURE, SCRATCH OR OTHERWISE DAMAGE THE OUTER JACKET OR THE PROTECTIVE COATING OF THE PIPE AS IT IS HANDLED OR INSTALLED. CHAINS, CHOKERS OR SIMILAR LIFTING DEVICES SHALL NOT BE USED.

3. ONCE THE PIPE IS LOWERED INTO THE TRENCH IT SHALL BE INSPECTED FOR DAMAGE TO THE OUTER JACKET OR PROTECTIVE COATING. ANY DAMAGE TO THE OUTER JACKET SHALL BE REPAIRED USING HEAT SHRINK WRAP. ANY DAMAGE TO THE PROTECTIVE COATING SHALL BE REPAIRED IN ACCORDANCE WITH THE PIPE MANUFACTURER'S RECOMMENDATIONS.

4. PIPE LAYING – ALL PIPE SHALL BE LAID IN REASONABLY CLOSE CONFORMANCE TO LINES AND GRADES SHOWN ON THE DRAWINGS. A CLEAN PIPE SHALL BE LAID, NO TRASH OR DEBRIS SHALL BE ALLOWED TO ENTER THE PIPE. OPEN ENDS OF PIPE AND FITTINGS SHALL BE PLUGGED AT ALL TIMES WHEN WORK IS NOT IN PROGRESS.

5. FLUSHING – ALL UTILITY LINES SHALL BE FLUSHED PRIOR TO PRESSURE TESTING TO REMOVE ANY FOREIGN MATTER.

6. WATER LINE TESTING – THE WATERLINE SHALL BE HYDROSTATICALLY TESTED TO 75 PSI WITH NO LEAKS. THE TEST SECTION SHALL BE COMPLETELY FILLED WITH CLEAN WATER, MAKING SURE TO BLEED OFF ANY TRAPPED AIR. FOR THE INITIAL EXPANSION PHASE, MAKEUP WATER SHALL BE ADDED AS REQUIRED TO MAINTAIN THE TEST PRESSURE FOR THREE HOURS. FOR THE TEST PHASE, THE TEST PRESSURE IS REDUCED BY 10 PSI. IF THE PRESSURE REMAINS STEADY (WITHIN 5% OF THE TARGET VALUE) FOR AN HOUR, NO LEAKAGE IS INDICATED.

7. THE GRAVITY SEWER LINES AND FORCEMAIN SEWER LINES SHALL BE PRESSURE TESTED TO ENSURE WATER-TIGHTNESS PER THE WATER LINE TESTING PROCEDURE UPON COMPLETION OF CONSTRUCTION (ADEC REQUIREMENT FOR WAIVER OF WATER AND SEWER LINE MINIMUM SEPARATION DISTANCE).

8. WATER LINE DISINFECTION – PRIOR TO BEING PLACED IN SERVICE, ALL POTABLE WATER PIPING SHALL BE DISINFECTED WITH A 20 PPM SOLUTION OF CHLORINE. AFTER DISINFECTION, FLUSH THE LINES WITH POTABLE WATER.

NOTES:
1. FIELD NOTES SHOULD BE RESEARCHED ALONG WITH THE PLAN INFORMATION, IN ANY FUTURE DIGGING, OR DESIGNING.
2. TEXT ONLY WAS CHANGED. DESIGN WAS NOT CHANGED. 4

UTILITY CONTACTS

- CITY OF TANANA ---------- (907)366-7159
- TANANA POWER CO. INC. / YUKON TELEPHONE CO. INC.
  LOCAL: RALPH ELLER ---- (907)366-7190
  WASILLA: DON ELLER ---- (907)373-6007
- TANANA NATIVE COUNCIL ------ (907)366-7113
- TOO'GHA INC. ---------- (907)366-7209

RECORD DRAWING CERTIFICATE
THESE DRAWINGS REFLECT RECORDED INFORMATION OBTAINED DURING CONSTRUCTION. INFORMATION PROVIDED HEREIN IS ACCURATE TO THE BEST OF MY KNOWLEDGE.
NAME Allyn E Bakeman DATE 6/16/06

STATE OF ALASKA 49TH ALLYN E. BAKEMAN No. CE 9806 REGISTERED PROFESSIONAL ENGINEER

VILLAGE SAFE WATER

STATE OF ALASKA 49TH MELINDA A. TAU No. CE-9806 REGISTERED PROFESSIONAL ENGINEER

MONTGOMERY WATSON
Anchorage, Alaska
IN ASSOCIATION WITH
EDC, INC.
ENGINEERING DESIGN CONSULTANTS

TOO'GHA INC. - TANANA, ALASKA
WATER DISTRIBUTION & WASTEWATER COLLECTION SYSTEM

GENERAL NOTES

REVISION	BY	DATE
AGENCY REVIEW	MT	7/14/00
ISSUED FOR CONSTRUCTION	MT	5/2001
1 RECORD DRAWING	MT	4/2005
2 RECORD DRAWING	AY	5/2006

Project No. 1189078.00/002
Date JULY 14, 2000
Designed MT
Drawn LF
Approved GM

Sheet No. G-1
SHEET ___ OF ___

JOB No.1189078.01010 09-JUN-2006 09:58 FILE: C:\Proj\tanana\ws_lines\cabit-2005\G01.dgn

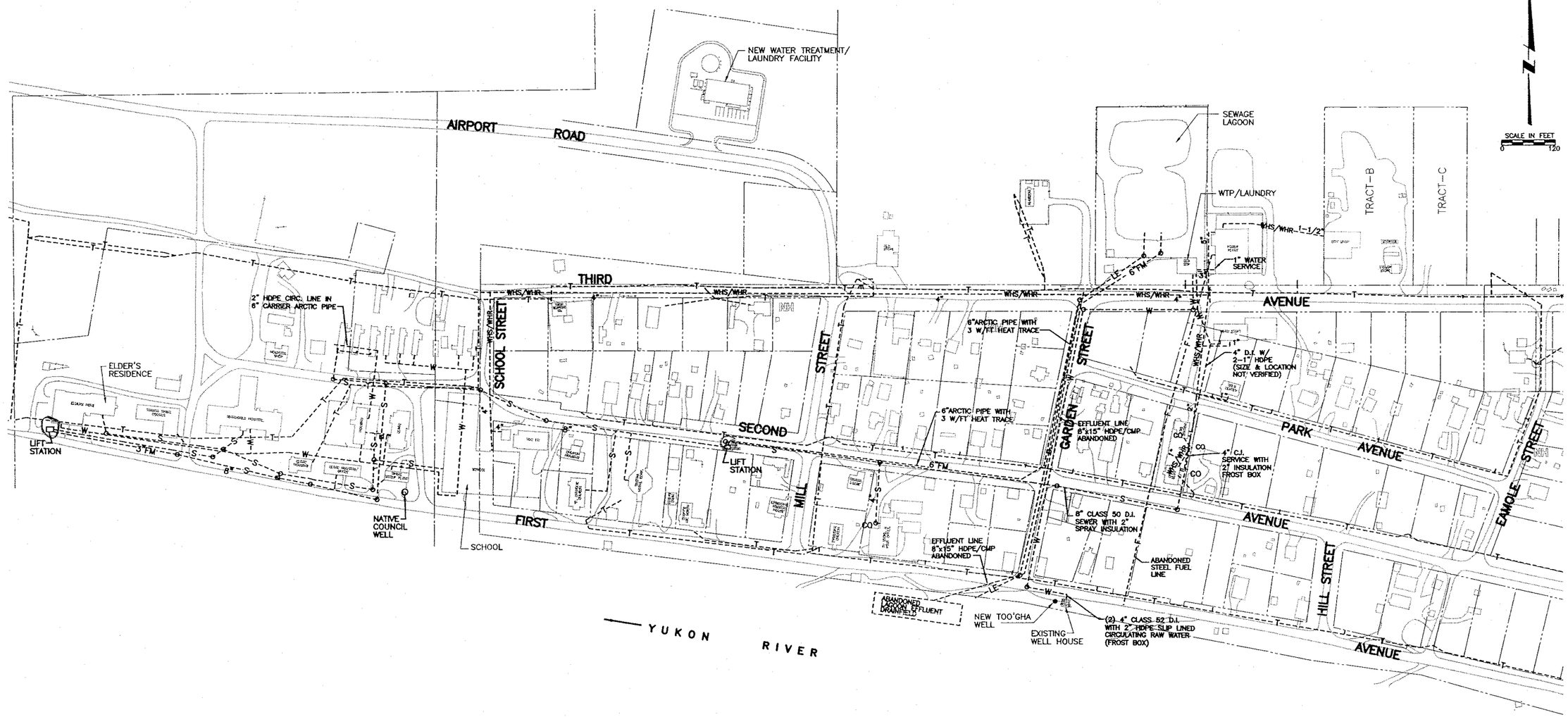

LEGEND:

----S----	SEWER LINE
----FM----	FORCE MAIN SEWER
----W----	WATER LINE
----F----	FUEL LINE
----LE----	LAGOON EFFLUENT LINE
----T----	TELEPHONE LINE
--WHS/WHR--	WASTE HEAT SUPPLY/RETURN
□	LIFT STATION
○	WELL
●	MANHOLE
CO	CLEAN OUT
	NEW HOUSE

NOTE:

THIS MAP REFLECTS EXISTING UTILITY INFORMATION AS OF JUNE 2000.
MAPPING OF THE EXISTING PIPED UTILITIES RESULTED FROM REVIEW OF HISTORICAL RECORDS. DATA GAPS WERE FOUND BASED ON LIMITED INFORMATION OR INFORMATION NOT FOUND. APPROXIMATIONS AND ASSUMPTIONS WERE MADE IN THOSE CASES. VERIFICATION IS ADVISED TO CONFIRM ACCURACY.

NOTES:
1. FIELD NOTES SHOULD BE RESEARCHED ALONG WITH THE PLAN INFORMATION, IN ANY FUTURE DIGGING, OR DESIGNING.
2. TEXT ONLY WAS CHANGED. DESIGN WAS NOT CHANGED. △3

RECORD DRAWING CERTIFICATE
THESE DRAWINGS REFLECT RECORDED INFORMATION OBTAINED DURING CONSTRUCTION. INFORMATION PROVIDED HEREIN IS ACCURATE TO THE BEST OF MY KNOWLEDGE.
NAME: Allyne Cockrum DATE: 4/4/06

STATE OF ALASKA 49TH ALLYNE COCKRUM No. CE-9642 REGISTERED PROFESSIONAL ENGINEER

VILLAGE SAFE WATER

STATE OF ALASKA 49TH MELINDA A. TIBU CE-9605 REGISTERED PROFESSIONAL ENGINEER

MONTGOMERY WATSON
Anchorage, Alaska
IN ASSOCIATION WITH:
EDC, INC.
510 N. Ridgeway
Anchorage, AK 99503

TOO'GHA INC. - TANANA, ALASKA
WATER DISTRIBUTION & WASTEWATER COLLECTION SYSTEM

EXISTING UTILITIES

REVISION	BY	DATE
AGENCY REVIEW	MT	7/14/00
ISSUED FOR CONSTRUCTION	MT	5/2001
△1 RECORD DRAWING	MT	4/2005
△3 RECORD DRAWING	AY	5/2006

Project No. 1189078.010102
Date JULY 14, 2000
Designed MT
Drawn LF
Approved GM

Sheet No. G-2
SHEET ___ OF ___

JOB No. 1189078.010102 09-JUL-2006 09:59 FILE: C:\Proj\tanana\ws_lines\asbit-2006\G02.dgn

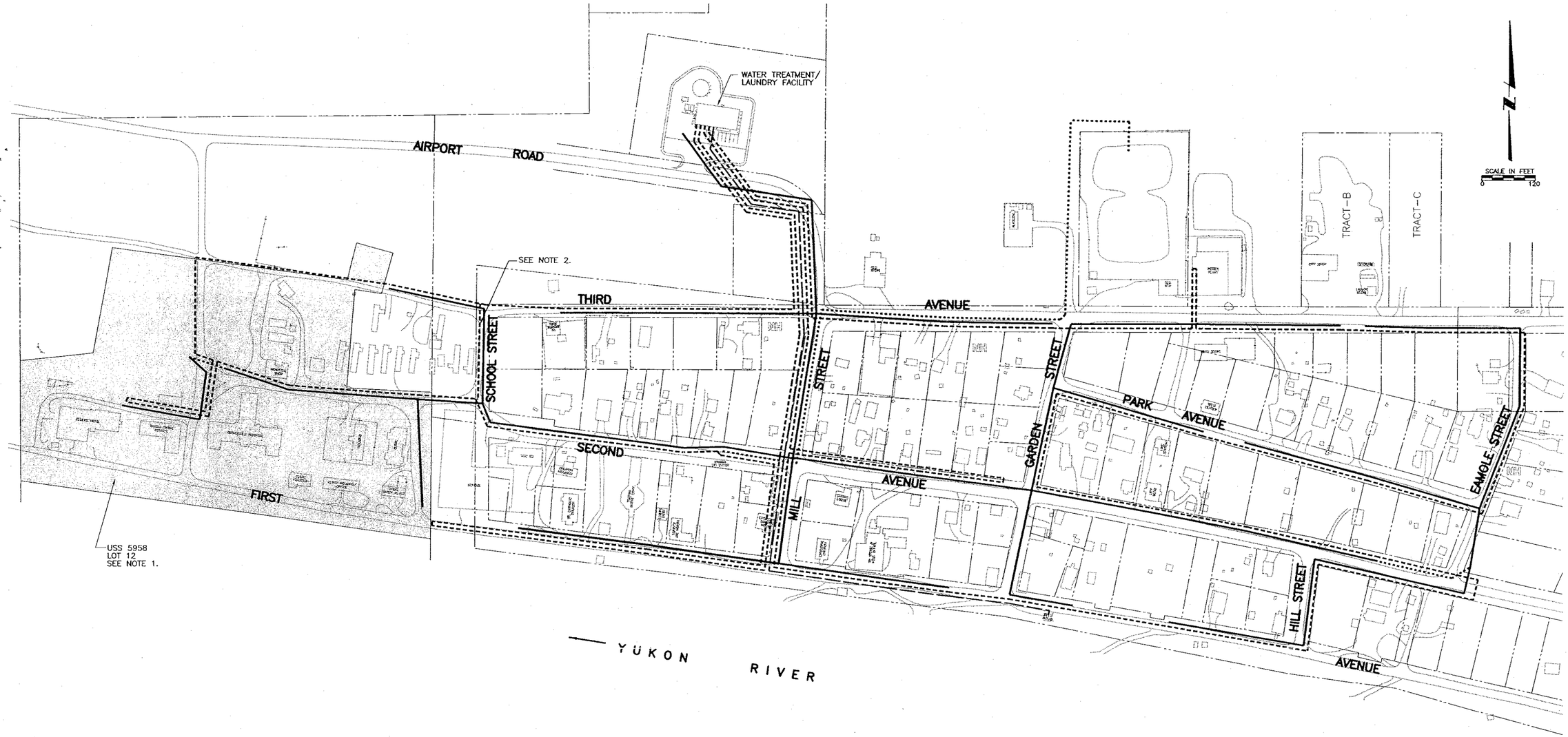

NOTE:

WATER AND SEWER MAINS WILL SHARE A COMMON TRENCH WHENEVER POSSIBLE. HOWEVER, INDIVIDUAL PIPES ARE SHOWN SEPARATE FOR CLARITY ON THIS MAP.

NOTES:

1. THE UTILITY ALIGNMENTS THROUGH THE FORMER ALASKA AREA NATIVE HEALTH SERVICE (AANHS) HOSPITAL COMPLEX (PROPERTY USS 5958, LOT 12) ENTERS KNOWN AREAS OF PETROLEUM-CONTAMINATED SOILS AS REPORTED IN "SITE INVESTIGATION REPORT PHASE II AANHS HOSPITAL, TANANA, ALASKA," MARCH 1997, ECOLOGY AND ENVIRONMENT, INC. UTILITY CONSTRUCTION WITHIN THIS AREA SHALL BE DEFERRED UNTIL REMEDIATION WORK IS COMPLETED.
2. CONSTRUCT WATER LINE SEGMENT SHOWN ON C-LINE ALIGNMENT AS TEMPORARY WATER LINE ROUTING. THIS LINE SHALL LATER BE ABANDONED UPON COMPLETION OF THE WEST LOOP AFTER REMEDIATION WORK IN AANHS COMPLEX IS COMPLETED.

LEGEND:

- SEWER LINE
- FORCE MAIN SEWER
- WATER LINE
- WATER TRANSMISSION LINE
- NEW HOUSE

NOTES:
1. FIELD NOTES SHOULD BE RESEARCHED ALONG WITH THE PLAN INFORMATION, IN ANY FUTURE DIGGING, OR DESIGNING.
2. TEXT ONLY WAS CHANGED. DESIGN WAS NOT CHANGED. △2

TOO'GHA INC. – TANANA, ALASKA
WATER DISTRIBUTION &
WASTEWATER COLLECTION SYSTEM

WATER AND SEWER KEY MAP

RECORD DRAWING CERTIFICATE
THESE DRAWINGS REFLECT RECORDED INFORMATION OBTAINED DURING CONSTRUCTION. INFORMATION PROVIDED HEREIN IS ACCURATE TO THE BEST OF MY KNOWLEDGE.
NAME Allen E. Yackum DATE 4/6/07

STATE OF ALASKA ALLEN E. YACKUM No. CE-9606 REGISTERED PROFESSIONAL ENGINEER

VILLAGE SAFE WATER

STATE OF ALASKA MELINDA A. TIM No. CE-9606 REGISTERED PROFESSIONAL ENGINEER

MONTGOMERY WATSON
Anchorage, Alaska
IN ASSOCIATION WITH
EDC, INC.
ENGINEERING DESIGN CONSULTANTS
Anchorage, Alaska

TOO'GHA INC. – TANANA, ALASKA
WATER DISTRIBUTION &
WASTEWATER COLLECTION SYSTEM
WATER AND SEWER KEY MAP

REVISION	BY	DATE
AGENCY REVIEW	MT	7/14/00
ISSUED FOR CONSTRUCTION	MT	5/2001
△1 RECORD DRAWING	MT	4/2005
△2 RECORD DRAWING	AY	5/2006

Project No. 1189078.010102
Date JULY 14, 2000
Designed MT
Drawn LF
Approved GM

Sheet No. G-3
SHEET OF

JOB No.1189078.010102 TIME: 09-JUN-2006 09:59 FILE: C:\Proj\tanana\ws_lines\asbit-2006\G03.dgn

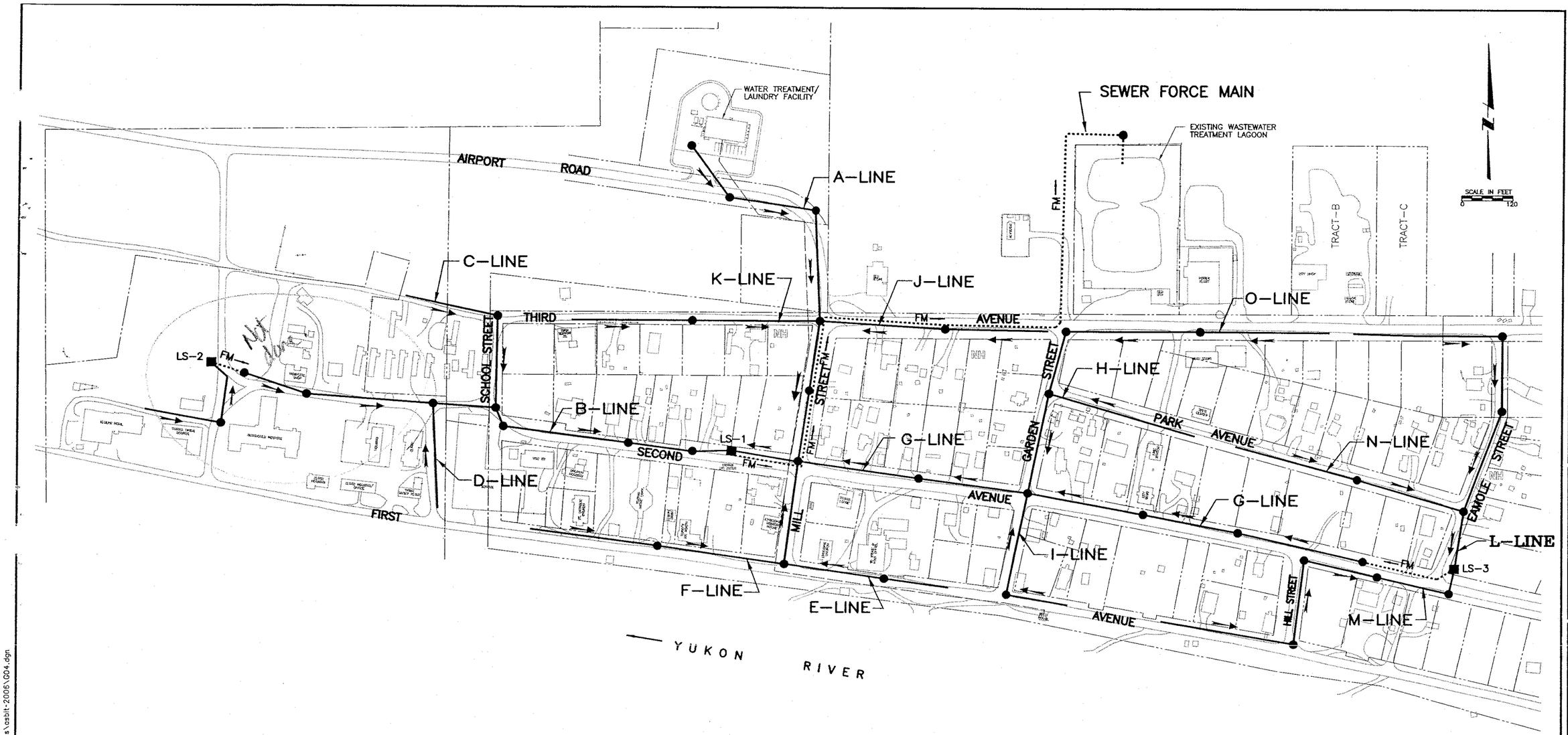

NOTE:

WATER AND SEWER MAINS WILL SHARE A COMMON TRENCH WHENEVER POSSIBLE. HOWEVER, INDIVIDUAL PIPES ARE SHOWN SEPARATE FOR CLARITY ON THIS MAP.

LEGEND:

- LIFT STATION
- SEWER MANHOLE
- SEWER FLOW DIRECTION
- FM — SEWER FORCE MAIN FLOW DIRECTION
- NEW HOUSE

NOTE:

THE DIFFERENT LINE TYPES ARE SHOWN TO DISTINGUISH EACH SEWER LINE FROM ADJACENT SEWER LINES.

NOTES:
1. FIELD NOTES SHOULD BE RESEARCHED ALONG WITH THE PLAN INFORMATION, IN ANY FUTURE DIGGING, OR DESIGNING.
2. TEXT ONLY WAS CHANGED. DESIGN WAS NOT CHANGED. △

RECORD DRAWING CERTIFICATE

THESE DRAWINGS REFLECT RECORDED INFORMATION OBTAINED DURING CONSTRUCTION. INFORMATION PROVIDED HEREIN IS ACCURATE TO THE BEST OF MY KNOWLEDGE.

NAME: Allyn E. Jackson DATE: 4/14/06

STATE OF ALASKA — ALLYN E. JACKSON — No. CE-4542 — REGISTERED PROFESSIONAL ENGINEER

VILLAGE SAFE WATER

STATE OF ALASKA — MELINDA A. TSU — CE-9806 — REGISTERED PROFESSIONAL ENGINEER

MONTGOMERY WATSON
Anchorage, Alaska

IN ASSOCIATION WITH
EDC, INC.
310 K Street, Suite 100
Anchorage, AK 99501

TOO'GHA INC. - TANANA, ALASKA
WATER DISTRIBUTION & WASTEWATER COLLECTION SYSTEM

SEWER KEY MAP

REVISION	BY	DATE
AGENCY REVIEW	MT	7/14/00
ISSUED FOR CONSTRUCTION	MT	5/2001
△ RECORD DRAWING	MT	4/2005
△ RECORD DRAWING	AY	5/2006

Project No. 1189078.010102
Date JULY 14, 2000
Designed MT
Drawn LF
Approved GM

Sheet No. G-4
SHEET ___ OF ___

JOB No.1189078.010102 TIME: 09-JUN-2006 10:00 FILE: C:\Proj\tanana\ws_lines\cabilt-2006\G04.dgn

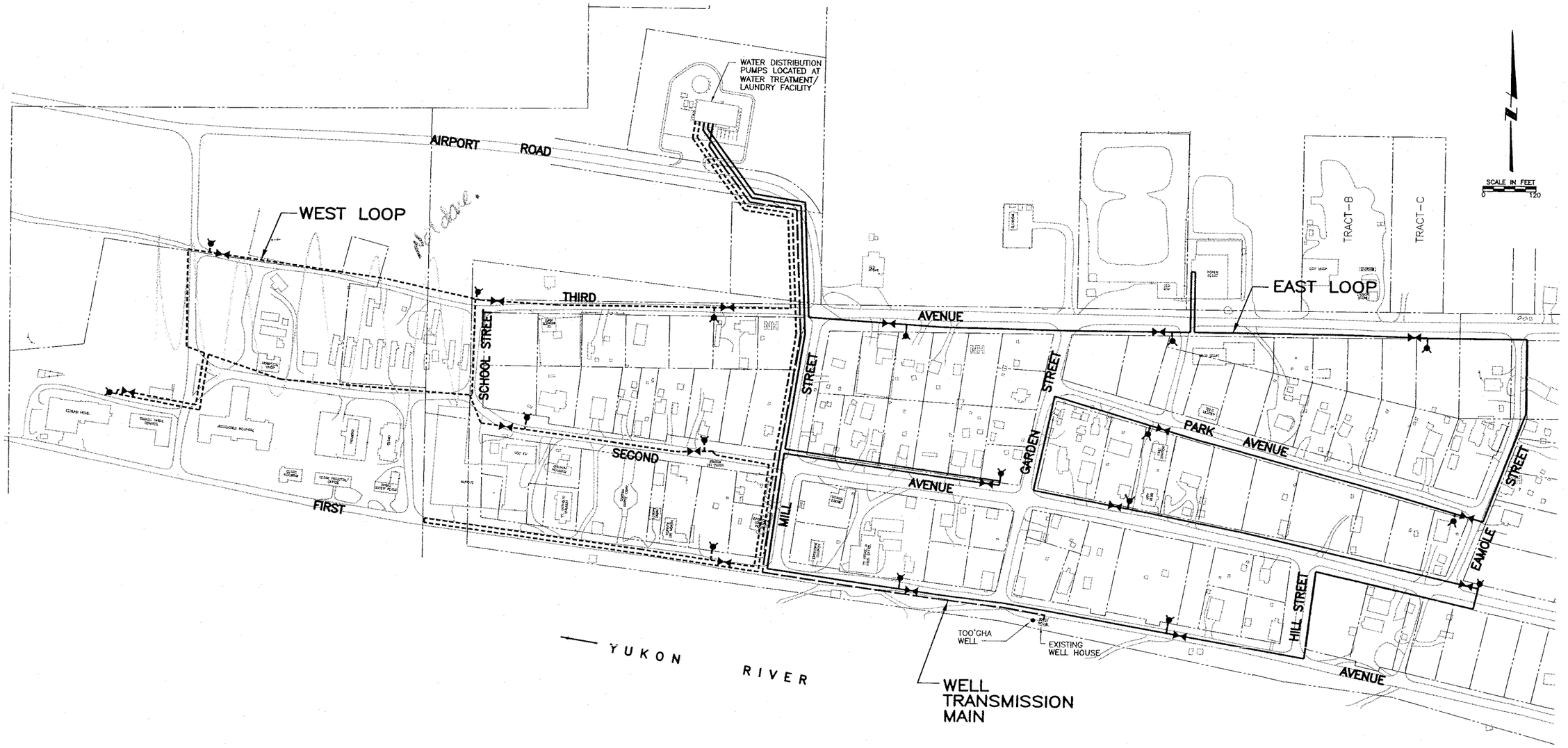

NOTE:

WATER AND SEWER MAINS WILL SHARE A COMMON TRENCH WHENEVER POSSIBLE. HOWEVER, INDIVIDUAL PIPES ARE SHOWN SEPARATE FOR CLARITY ON THIS MAP.

LEGEND:

- WATER LINE – EAST LOOP
- WATER LINE – WEST LOOP
- WATER TRANSMISSION LINE
- FIRE HYDRANT
- GATE VALVE
- NEW HOUSE

NOTES:
1. FIELD NOTES SHOULD BE RESEARCHED ALONG WITH THE PLAN INFORMATION, IN ANY FUTURE DIGGING, OR DESIGNING.
2. TEXT ONLY WAS CHANGED. DESIGN WAS NOT CHANGED. △2

RECORD DRAWING CERTIFICATE

THESE DRAWINGS REFLECT RECORDED INFORMATION OBTAINED DURING CONSTRUCTION. INFORMATION PROVIDED HEREIN IS ACCURATE TO THE BEST OF MY KNOWLEDGE.

NAME Alan E. Yoakum DATE 4/14/06

STATE OF ALASKA 49TH ALAN E. YOAKUM No. CE-9606 REGISTERED PROFESSIONAL ENGINEER

VILLAGE SAFE WATER

STATE OF ALASKA 49TH MELANIE A. TOU No. CE-9606 REGISTERED PROFESSIONAL ENGINEER

MONTGOMERY WATSON
Anchorage, Alaska
IN ASSOCIATION WITH
EDC, INC.
310 K Street
Anchorage, AK 99501

TOO'GHA INC. – TANANA, ALASKA
WATER DISTRIBUTION & WASTEWATER COLLECTION SYSTEM

WATER KEY MAP

REVISION	BY	DATE
AGENCY REVIEW	MT	7/14/00
ISSUED FOR CONSTRUCTION	MT	5/2001
△1 RECORD DRAWING	MT	4/2005
△2 RECORD DRAWING	AY	5/2006

Project No. 1189078.010102
Date JULY 14, 2000
Designed MT
Drawn LF
Approved GM

Sheet No. G-5
SHEET ___ OF ___

JOB No.1189078.010102 TIME: 09-JUN-2006 10:00 FILE: C:\Proj\tanana\wa_lines\asbit-2006\G05.dgn

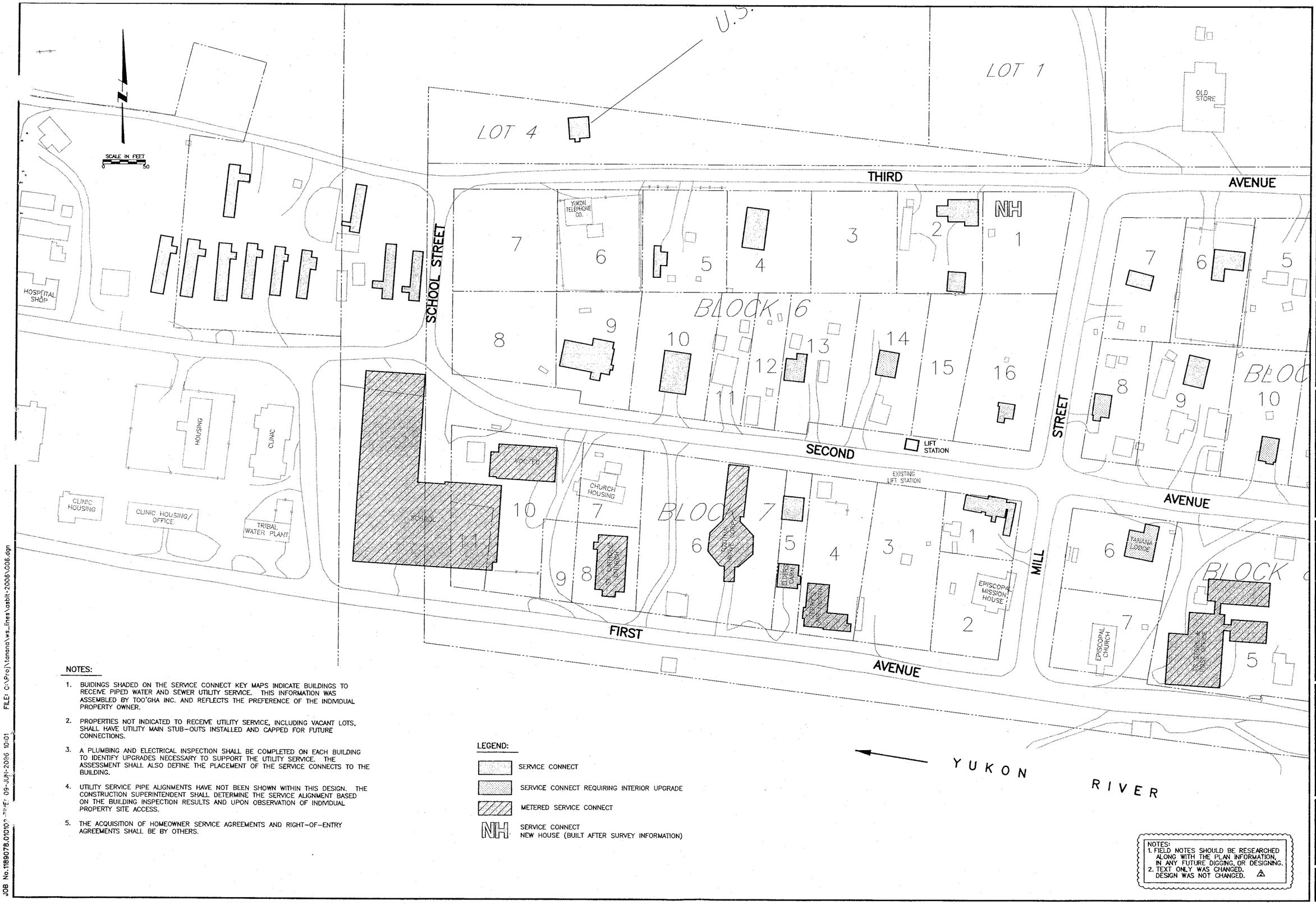

NOTES:

1. BUIDINGS SHADED ON THE SERVICE CONNECT KEY MAPS INDICATE BUILDINGS TO RECEIVE PIPED WATER AND SEWER UTILITY SERVICE. THIS INFORMATION WAS ASSEMBLED BY TOO'GHA INC. AND REFLECTS THE PREFERENCE OF THE INDIVIDUAL PROPERTY OWNER.
2. PROPERTIES NOT INDICATED TO RECEIVE UTILITY SERVICE, INCLUDING VACANT LOTS, SHALL HAVE UTILITY MAIN STUB-OUTS INSTALLED AND CAPPED FOR FUTURE CONNECTIONS.
3. A PLUMBING AND ELECTRICAL INSPECTION SHALL BE COMPLETED ON EACH BUILDING TO IDENTIFY UPGRADES NECESSARY TO SUPPORT THE UTILITY SERVICE. THE ASSESSMENT SHALL ALSO DEFINE THE PLACEMENT OF THE SERVICE CONNECTS TO THE BUILDING.
4. UTILITY SERVICE PIPE ALIGNMENTS HAVE NOT BEEN SHOWN WITHIN THIS DESIGN. THE CONSTRUCTION SUPERINTENDENT SHALL DETERMINE THE SERVICE ALIGNMENT BASED ON THE BUILDING INSPECTION RESULTS AND UPON OBSERVATION OF INDIVIDUAL PROPERTY SITE ACCESS.
5. THE ACQUISITION OF HOMEOWNER SERVICE AGREEMENTS AND RIGHT-OF-ENTRY AGREEMENTS SHALL BE BY OTHERS.

LEGEND:

- SERVICE CONNECT
- SERVICE CONNECT REQUIRING INTERIOR UPGRADE
- METERED SERVICE CONNECT
- NH SERVICE CONNECT NEW HOUSE (BUILT AFTER SURVEY INFORMATION)

NOTES:
1. FIELD NOTES SHOULD BE RESEARCHED ALONG WITH THE PLAN INFORMATION, IN ANY FUTURE DIGGING, OR DESIGNING.
2. TEXT ONLY WAS CHANGED. DESIGN WAS NOT CHANGED. △

RECORD DRAWING CERTIFICATE
THESE DRAWINGS REFLECT RECORDED INFORMATION OBTAINED DURING CONSTRUCTION. INFORMATION PROVIDED HEREIN IS ACCURATE TO THE BEST OF MY KNOWLEDGE.
Allyn E. Jackson 6/14/06
NAME DATE

STATE OF ALASKA 14TH ALLYN E. JACKSON No. CE-9342 REGISTERED PROFESSIONAL ENGINEER

VILLAGE SAFE WATER

STATE OF ALASKA 14TH MELINDA A. TSU CE-9606 REGISTERED PROFESSIONAL ENGINEER

MONTGOMERY WATSON
Anchorage, Alaska
IN ASSOCIATION WITH
EDC, INC.
815 W. 4th Avenue, Ste. 1
Anchorage, AK 99501

TOO'GHA INC. - TANANA, ALASKA
WATER DISTRIBUTION & WASTEWATER COLLECTION SYSTEM

UTILITY SERVICE CONNECT KEY MAP (WEST SIDE)

REVISION	BY	DATE
AGENCY REVIEW	MT	7/14/00
ISSUED FOR CONSTRUCTION	MT	5/2001
△ RECORD DRAWING	MT	4/2005
△ RECORD DRAWING	AY	5/2006

Project No. 1189078.01010/2
Date JULY 14, 2000
Designed MT
Drawn LF
Approved GM

Sheet No. G-6
SHEET ___ OF ___

JOB No.1189078.01010/2 DATE: 09-JUN-2006 10:01 FILE: C:\Proj\tanana\ws_lines\gabit-2006\G06.dgn

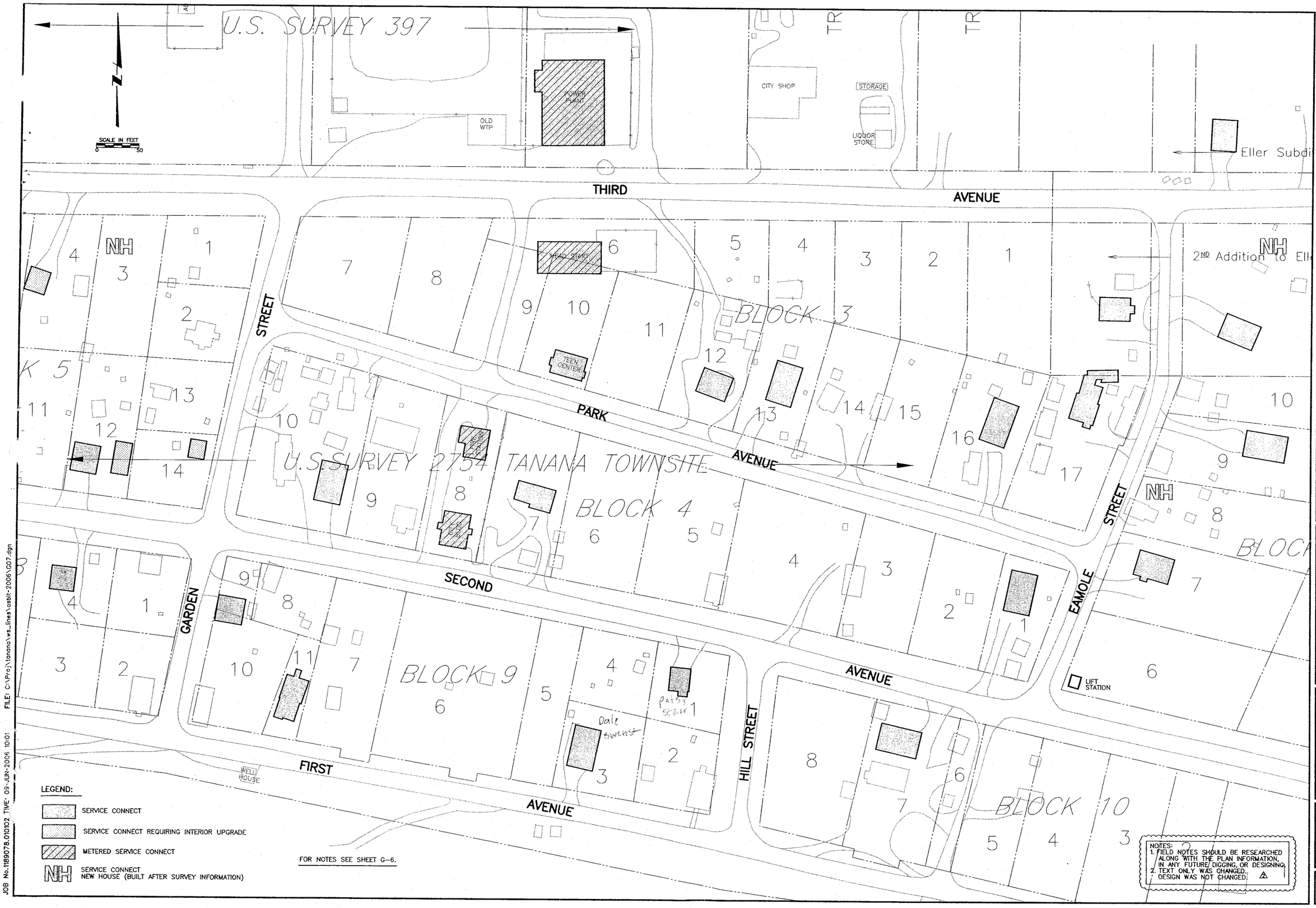

JOB No.1189078.010102 TIME: 09-JUN-2006 10:01 FILE: C:\Proj\tanana\ws_lines\asbit-2006\C07.dgn

RECORD DRAWING CERTIFICATE
THESE DRAWINGS REFLECT RECORDED INFORMATION OBTAINED DURING CONSTRUCTION. INFORMATION PROVIDED HEREIN IS ACCURATE TO THE BEST OF MY KNOWLEDGE.
NAME Allen E. Yoakum DATE 6/16/06

STATE OF ALASKA 49TH ALLEN E. YOAKUM No. CE-9608 REGISTERED PROFESSIONAL ENGINEER

VILLAGE SAFE WATER

STATE OF ALASKA 49TH MELINDA A. TRU CE-9608 REGISTERED PROFESSIONAL ENGINEER

MONTGOMERY WATSON Anchorage, Alaska
IN ASSOCIATION WITH
EDC, INC. 813 W. Fireweed Lane Anchorage, AK 99503

TOO'GHA INC. - TANANA, ALASKA
WATER DISTRIBUTION & WASTEWATER COLLECTION SYSTEM

UTILITY SERVICE CONNECT KEY MAP (EAST SIDE)

REVISION	BY	DATE
AGENCY REVIEW	MT	7/14/00
ISSUED FOR CONSTRUCTION	MT	5/2001
1 RECORD DRAWING	MT	4/2005
2 RECORD DRAWING	AY	5/2006

Project No. 1189078.010102
Date JULY 14, 2000
Designed MT
Drawn LF
Approved GM

Sheet No. G-7
SHEET OF

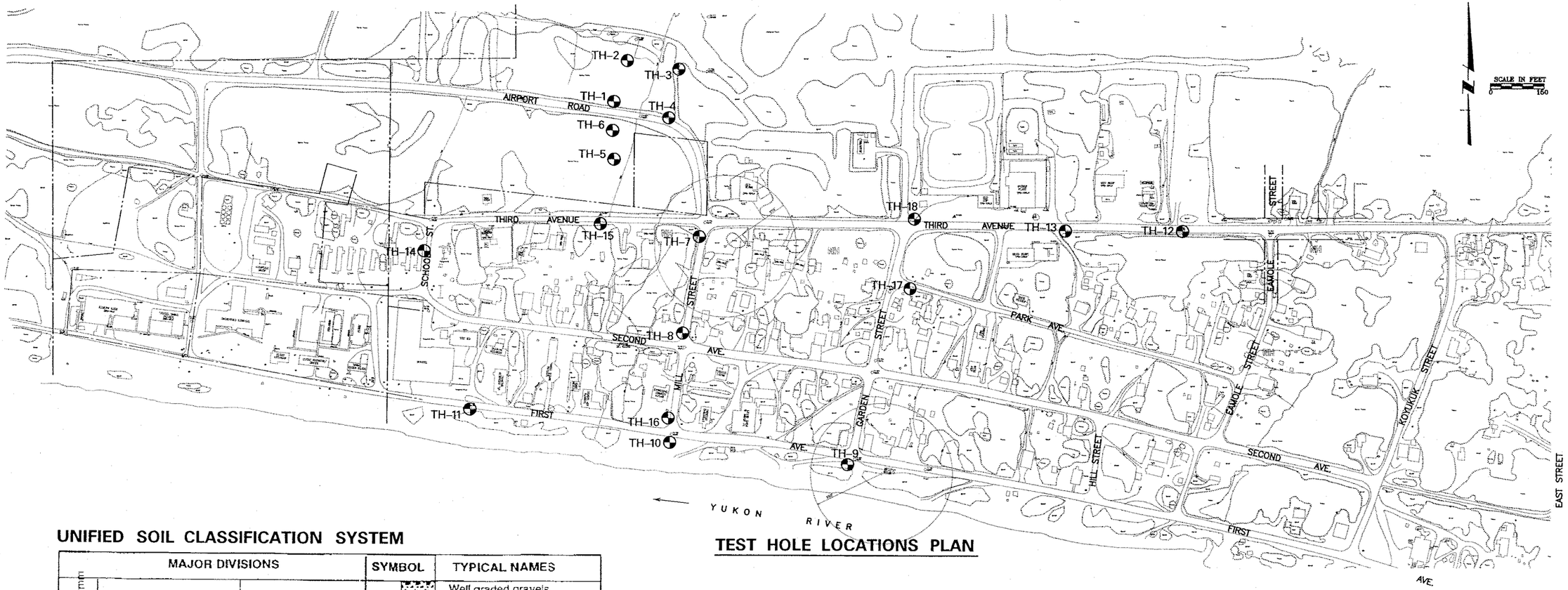

TEST HOLE LOCATIONS PLAN

UNIFIED SOIL CLASSIFICATION SYSTEM

MAJOR DIVISIONS			SYMBOL	TYPICAL NAMES
COARSE GRAINED SOILS More than 50% larger than #200 sieve, >0.07 mm	GRAVELS More than half of the coarse fraction is larger than #4 sieve size, > 4.75 mm.	Clean gravels with little or no fines	GW	Well graded gravels, sandy gravel
			GP	Poorly graded gravels, sandy gravel
		Gravels with more than 12% fines	GM	Silty gravels, silt sand gravel mixtures
			GC	Clayey gravels, clay sand gravel mixtures
	SANDS More than half of the coarse fraction is smaller than #4 sieve size	Clean sands with little or no fines	SW	Well graded sand, gravelly sand
			SP	Poorly graded sands, gravelly sand
		Sands with more than 12% fines	SM	Silty sand, silt gravel sand mixtures
			SC	Clayey sand, clay gravel sand mixtures
FINE GRAINED SOILS >50% finer than #200 sieve, 0.07 mm	Plasticity Chart (Plasticity Index 0–40; Liquid Limit 0–50; CL, CH, ML, MH)	SILTS and CLAYS Liquid limit less than 50	ML	Inorganic silt and very fine sand, rock flour
			CL	Inorganic clay, gravelly and sandy clay, silty clay
			OL	Organic silts and clay of low plasticity
		SILTS and CLAYS Liquid limit greater than 50	MH	Inorganic silt
			CH	Inorganic clay, fat clay
			OH	Organic silt and clay of high plasticity
HIGHLY ORGANIC SOILS			Pt	Peat and other highly organic soil

ICE CLASSIFICATION SYSTEM

GROUP	ICE VISIBILITY	DESCRIPTION		SYMBOL	
N	Segregated ice not visible by eye	Poorly bonded or friable		Nf	
		Well bonded	No excess ice	Nb	Nbn
			Excess microscopic ice		Nbe
V	Segregated ice is visible by eye and is one inch or less in thickness	Individual ice crystals or inclusions		Vx	
		Ice coatings on particles		Vc	
		Random or irregularly oriented ice		Vr	
		Stratified or distinctly oriented ice		Vs	
ICE	Ice greater than one inch in thickness	Ice with soil inclusions		ICE + soil type	
		Ice without soil inclusions		ICE	

NOTES:
1. FIELD NOTES SHOULD BE RESEARCHED ALONG WITH THE PLAN INFORMATION, IN ANY FUTURE DIGGING OR DESIGNING.
2. TEXT ONLY WAS CHANGED. DESIGN WAS NOT CHANGED. △2

Duane Miller & Associates
Arctic & Geotechnical Engineering

RECORD DRAWING CERTIFICATE
THESE DRAWINGS REFLECT RECORDED INFORMATION OBTAINED DURING CONSTRUCTION. INFORMATION PROVIDED HEREIN IS ACCURATE TO THE BEST OF MY KNOWLEDGE.
NAME: Allyne Scalan DATE: 6/6/06
STATE OF ALASKA 14TH ALYN E. YOKUM No. CE 4242 REGISTERED PROFESSIONAL ENGINEER

VILLAGE SAFE WATER

MONTGOMERY WATSON Anchorage, Alaska
IN ASSOCIATION WITH EDC, INC.

TOO'GHA INC. – TANANA, ALASKA
WATER DISTRIBUTION & WASTEWATER COLLECTION SYSTEM
SOIL TEST HOLE KEY MAP

REVISION	BY	DATE
AGENCY REVIEW	MT	7/14/00
ISSUED FOR CONSTRUCTION	MT	5/2001
△1 RECORD DRAWING	MT	4/2005
△2 RECORD DRAWING	AY	5/2006

Project No. 1189078.010102
Date JULY 14, 2000
Designed MT
Drawn LF
Approved GM

Sheet No. G-8
SHEET OF

JOB No.1189078.010102 19-JUN-2006 10:23 FILE: C:\Proj\tanana\ws_lines\asbilt-2006\G08.dgn

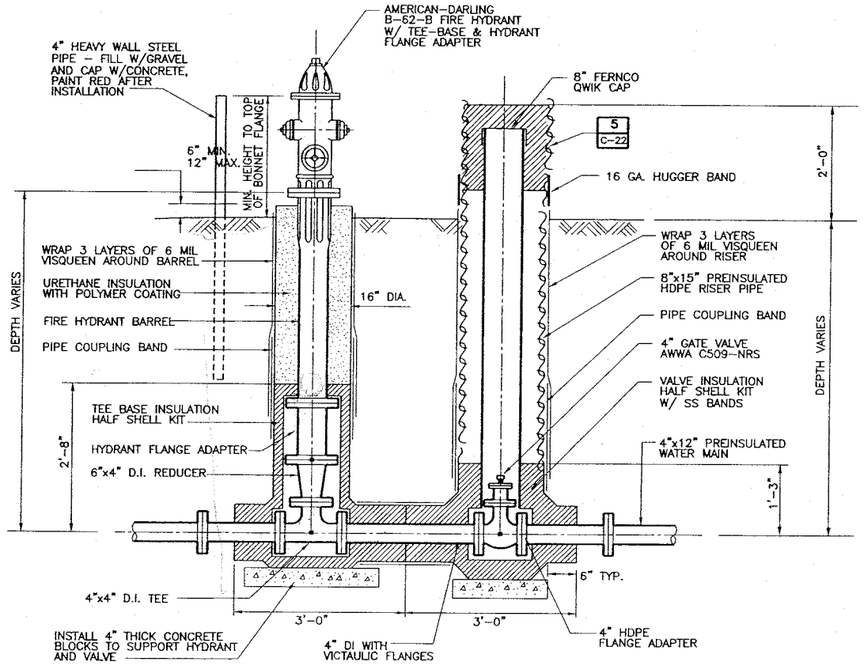

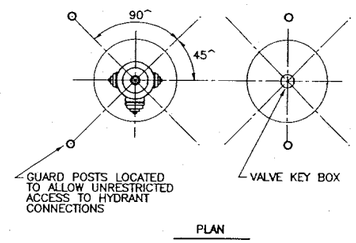

FIRE HYDRANT WITH GATE VALVE DETAIL 1/—

NOT TO SCALE

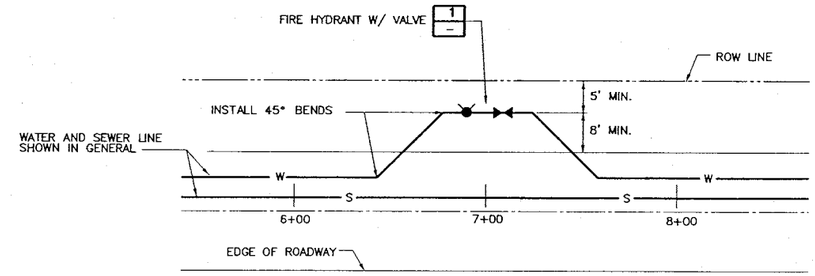

HYDRANT LOCATION PLAN (TYP.)

NOT TO SCALE

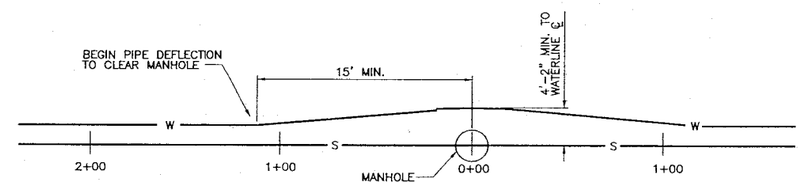

WATER LINE AROUND MANHOLE PLAN (TYP.)

NOT TO SCALE

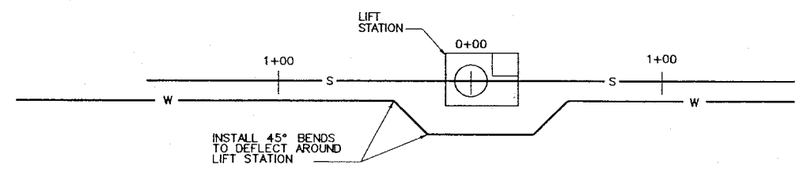

WATER LINE AROUND LIFT STATION PLAN (TYP.)

NOTES:
1. FIELD NOTES SHOULD BE RESEARCHED ALONG WITH THE PLAN INFORMATION, IN ANY FUTURE DIGGING, OR DESIGNING.
2. TEXT ONLY WAS CHANGED. DESIGN WAS NOT CHANGED. △2

RECORD DRAWING CERTIFICATE
THESE DRAWINGS REFLECT RECORDED INFORMATION OBTAINED DURING CONSTRUCTION. INFORMATION PROVIDED HEREIN IS ACCURATE TO THE BEST OF MY KNOWLEDGE.
NAME Melinda A. Tsu DATE 6/14/06
STATE OF ALASKA 14TH MELINDA A. TSU No. CE 4542 REGISTERED PROFESSIONAL ENGINEER

VILLAGE SAFE WATER

STATE OF ALASKA 14TH MELINDA A. TSU CE 9608 REGISTERED PROFESSIONAL ENGINEER

MONTGOMERY WATSON
Anchorage, Alaska
IN ASSOCIATION WITH
EDC, INC.
Anchorage, Alaska

TOO'GHA INC. - TANANA, ALASKA
WATER DISTRIBUTION & WASTEWATER COLLECTION SYSTEM
FIRE HYDRANT AND WATER MAIN ALIGNMENT DETAILS

REVISION	BY	DATE
AGENCY REVIEW	MT	7/14/00
ISSUED FOR CONSTRUCTION	MT	5/2001
△1 RECORD DRAWING	MT	4/2005
△2 RECORD DRAWING	AY	5/2006

Project No. 1189078.010102
Date JULY 14, 2000
Designed MT
Drawn LF
Approved GM

Sheet No. C-25
SHEET ___ OF ___

JOB No.1189078.010102 TIME: 09-JUN-2006 10:45 FILE: C:\Proj\tanana\ws_lines\vsbit-2006\C25.DGN

TEST HOLE 1 (TH–1)

Date Drilled: August 26, 1997
Contractor: Hughes Drilling Co.
Rig Type: CME-45 on truck w/ hollow stem
Logged By: W. Phillips, P.G
Elevation: -
~30 ft. N Airport Rd

Depth (feet) | Samples | Graphic Log | Frozen

Description

PEAT: (Pt) Organic Mat and dark brown silt

SILT: (ML) Gray w/ trace organic mat and sieves, little visible ice (Nbe) <2% visible ice as Vc on organic pieces

Dark gray, no organics below 7.0 (Nbn)

SANDY GRAVEL: (GP-GM) Gray, interbedded w/ Gravelly Sand (SP-SM), maximum gravel size is 1/2", 2% ice Vc

Gravel is <1" diameter and subround, 2 to 5% visible ice as void filling and pebble coating (Vs+Vc) at 20'

Gravelly Sand w/ some Silt (SM) at 30'

Placed 0.75" diameter solid PVC pipe to 30'

TEST HOLE 2 (TH–2)

Date Drilled: August 26, 1997
Contractor: Hughes Drilling Co.
Rig Type: CME-45 on truck w/ hollow stem
Logged By: W. Phillips, P.G.
Elevation: -
~120 ft. N of Airport Rd

Depth (feet) | Samples | Graphic Log | Frozen

Description

ORGANIC SILT: (OL) Brown organic mat and brown silt

PEAT: (Pt) Brown, fibrous w/ 5-10% visible ice (Vc)

SILT: (ML) Gray w/ trace to some organic material, visible ice to 2% (Vc+Vs)

SILT: (ML) Gray w/ little or no visible ice (Nbn)

SANDY GRAVEL: (GP-GM) Gray w/ trace silt, little or no visible ice <1% (Vc)

GRAVELLY SAND: (SP-SM) Gray

SANDY GRAVEL: (GP-GM) Gray w/ maximum gravel 3/4" to 2", 1" zone at 15 - 20% visible ice 5% visible ice (Vc) elsewhere

Placed 0.75" diameter solid PVC pipe to 30'

TEST HOLE 3 (TH–3)

Date Drilled: August 27, 1997
Contractor: Hughes Drilling Co.
Rig Type: CME-45 on truck w/ hollow stem
Logged By: W. Phillips, P.G.
Elevation: -
~140 ft. N of Airport Rd

Depth (feet) | Samples | Graphic Log | Frozen

Description

PEAT: (Pt) Brown organic mat and Silt

SILT: (ML) Gray-brown w/ organic inclusions and clayey zones (CL-ML). Nbe except <1% visible ice as coating on organic material

SILT: (ML) Gray, 1% visible ice as thin horizontal partings (Vs)

SANDY GRAVEL: (GP-GM) Gray, weathered pebbles, subround, 2% visible ice as void filling and pebble coating and bonding agent (Vs+Vc)

Gravelly sand zone 17.0' to 18.5

Gravel to 2" diameter from 21' to 22'

Gravel to 2" diameter from 28' to 29'

Placed 0.75" diameter solid PVC pipe to 30'

TEST HOLE 4 (TH–4)

Date Drilled: August 27, 1997
Contractor: Hughes Drilling Co.
Rig Type: CME-45 on truck w/ hollow stem
Logged By: W. Phillips, P.G.
Elevation: -
N shoulder of Airport Rd

Depth (feet) | Samples | Graphic Log | Frozen

Description

GRAVEL: (FILL) Gray gravelly sand

ORGANIC SILT: (OL) Brown, moist

SILT: (ML) Gray w/ scattered organic bits, 2 to 5% visible ice bits w 5.5'

SILT: (ML) Gray, <1% visible ice, some Nbn

SANDY GRAVEL: (GP-GM) Gray

GRAVELLY SAND: (SP-SM) Gray

SANDY GRAVEL: (GP-GM) Gray w/ layers with some Silt (GM); <2% visible ice (Vc+Vs). Gravel <1" max. diameter. 2" between 15.5' and 17'

Six inch layers of Sandy Gravel w/ clasts to 2" at 19' and 21'

GRAVEL: (GP-GM) Gray, coarse, 2 to 5% visible ice, interstitial (Vs+Vc)

Placed 0.75" diameter solid PVC pipe to 31'

TEST HOLE 5 (TH–5)

Date Drilled: August 27, 1997
Contractor: Hughes Drilling Co.
Rig Type: CME-45 on truck w/ hollow stem
Logged By: W. Phillips, P.G.
Elevation: -
~130 ft. S of Airport Rd

Depth (feet) | Samples | Graphic Log | Frozen

Description

PEAT: (Pt+OL) Organic silt and organic mat

SILT: (ML) Gray-brown, 10-15% visible ice (Vs+Vs) as crystals and parting coating

SILT: (ML) Gray, w/ trace fine sand, little to no visible ice (Nbn)

SAND: (SP-SM) Brown, fine, no visible ice, moderate frost bond, very small scattered pebbles

GRAVELLY SAND: (SP) Gray-brown, pebbly

SANDY GRAVEL: (GP-GM) Gray, 1" max. diameter, w/ thin sandy layers (SM-SM) and zones w/ clasts to 2"

Placed 0.75" diameter solid PVC pipe to 30

TEST HOLE 6 (TH–6)

Date Drilled: August 26, 1997
Contractor: Hughes Drilling Co.
Rig Type: CME-45 on truck w/ hollow stem
Logged By: W. Phillips, P.G.
Elevation: -
~50 ft. S of Airport Rd

Depth (feet) | Samples | Graphic Log | Frozen

Description

ORGANIC SILT: (OL) Black, w/ organic mat (Pt)

SILT: (OL) Mottled black and brown w/ mixed organics, 5 to 10% visible ice Vc to 1/4" thick

SILT: (ML) Mottled gray brown w/ trace organic material and clayey zones (CL-ML), <1% visible ice, Vc. No visible ice below 5', Nbn

SILT: (ML) Gray, little visible ice (Nbe)

SANDY GRAVEL: (GP) Gray, clasts to 2", generally <1". Sandy zone 13' to 14'

2" maximum gravel between 14' to 15'

Placed 0.75" diameter solid PVC pipe to 20'

TEST HOLE 7 (TH–7)

Date Drilled: August 28, 1997
Contractor: Hughes Drilling Co.
Rig Type: CME-45 on truck w/ hollow stem
Logged By: W. Phillips, P.G.
Elevation: -
3rd & Mills, SW corner

Depth (feet) | Samples | Graphic Log | Frozen

Description

GRAVELLY SAND: (FILL/SP-SM) Brown

ORGANIC SILT: (OL) Black

SILT: (ML) Brown

SANDY GRAVEL: (GP-GM) Gray-brown

SAND: (SP) Brown, no visible ice (Nbn)

SANDY GRAVEL: (GP-GM) Gray, clasts to 1.5", moderate frost bond, Nbn

SAND: (SM) Gray, w/ some Silt and trace Gravel, very weak or no frost bond, moist

SANDY GRAVEL: (SP) Gray w/ layers of Gravelly Sand w/ some Silt (SM), 1% visible ice (Vs+Vc)

Placed 0.75" diameter solid PVC pipe to 20'

TEST HOLE 8 (TH–8)

Date Drilled: August 28, 1997
Contractor: Hughes Drilling Co.
Rig Type: CME-45 on truck w/ hollow stem
Logged By: W. Phillips, P.G.
Elevation: -
2nd & Mills, NW corner

Depth (feet) | Samples | Graphic Log | Frozen

Description

GRAVELLY SAND: (FILL) Brown

ORGANIC SILT: (OL) Black

SILT: (ML) Gray-brown, mottled, trace organic mat

SANDY GRAVEL: (GM) Gray w/ some Silt, weak frost bond

GRAVELLY SAND: (SP-SM) Brown, interbedded w/ brown Sand w/ trace Gravel (pebbles)

SILTY SAND: (SM) Gray

SANDY GRAVEL: (GP-GM) Gray, 1 to 2% visible ice as crystals & pebble coating (Vs+Vc)

Placed 0.75" diameter solid PVC pipe to 20'

TEST HOLE 9 (TH–9)

Date Drilled: August 28, 1997
Contractor: Hughes Drilling Co.
Rig Type: CME-45 on truck w/ hollow stem
Logged By: W. Phillips, P.G.
Elevation: -
1st & Garden, 30 ft S

Depth (feet) | Samples | Graphic Log | Frozen

Description

SANDY SILT: (SM) Brown, loose to medium dense, scattered pebbles

SILT: (ML) Brown, w/ fine Sand, medium stiff, damp

SANDY GRAVEL: (GP-GM) Gray, interbedded with Brown Sand w/ some gravel (SM-SM), dry, dense

TEST HOLE 10 (TH–10)

Date Drilled: August 28, 1997
Contractor: Hughes Drilling Co.
Rig Type: CME-45 on truck w/ hollow stem
Logged By: W. Phillips, P.G.
Elevation: -
1st & Mills, ~30 ft S

Depth (feet) | Samples | Graphic Log | Frozen

Description

SILTY SAND: (SM) Brown, dry, loose

SILT: (ML) Brown and gray, mottled, dry, medium dense

SANDY GRAVEL: (GP) Gray, dry, medium dense, 6" layer of light brown dry silt at 6.5'

SAND: (SP-SM) Gray, trace gravel

SANDY GRAVEL: (GP-GM) Gray-brown interbedded with Gravelly Sand (SP-SM), dry to damp, dense. Clasts to 2" between 15' and 17.5', <1" diameter elsewhere

SAND: (SP) Gray

Groundwater observed at 19' during drilling

Placed 0.75" diameter slotted PVC pipe to 20'

TEST HOLE 11 (TH–11)

Date Drilled: August 26, 1997
Contractor: Hughes Drilling Co.
Rig Type: CME-45 on truck w/ hollow stem
Logged By: W. Phillips, P.G.
Elevation: -
1st @ school, S edge

Depth (feet) | Samples | Graphic Log | Frozen

Description

SANDY GRAVEL: (FILL) Brown

ORGANIC SILT: (OL) Black w/ roots

SILT: (ML) Brown, mottled

SILTY SAND: (SM) Gray w/ thin frozen silty zones

SAND: (SP-SM) Brown, moderate frost bond

SANDY GRAVEL: (GP-GM) Grey-brown, 1% visible ice (Vs+Vc)

SAND: (SP) Washed brown w/ some gravel

Groundwater observed at 20' during drilling

Placed 0.75" diameter slotted PVC pipe to 20'

TEST HOLE 12 (TH–12)

Date Drilled: August 29, 1997
Contractor: Hughes Drilling Co.
Rig Type: CME-45 on truck w/ hollow stem
Logged By: W. Phillips, P.G.
Elevation: -
3rd @ Ice rink, S edge

Depth (feet) | Samples | Graphic Log | Frozen

Description

SANDY GRAVEL: (FILL) Brown

ORGANIC SILT: (OL) Black w/ trace sand and gravel (pebbles)

SILT: (ML) Brown w/ mottled gray. Little visible ice below 7'. Nbn. w/ a few very small crystals

SANDY GRAVEL: (GP-GM) Gray, <2% visible ice as void filling (Vc+Vs)

Placed 0.75" diameter solid PVC pipe to 20

NOTES:
1. FIELD NOTES SHOULD BE RESEARCHED ALONG WITH THE PLAN INFORMATION, IN ANY FUTURE DIGGING OR DESIGNING.
2. TEXT ONLY WAS CHANGED. DESIGN WAS NOT CHANGED. △1

RECORD DRAWING CERTIFICATE
THESE DRAWINGS REFLECT RECORDED INFORMATION OBTAINED DURING CONSTRUCTION. INFORMATION PROVIDED HEREIN IS ACCURATE TO THE BEST OF MY KNOWLEDGE.
NAME Alyne Yoakum DATE 4/6/06
STATE OF ALASKA 9TH ALYNE J. YOAKUM No. CE 4342 REGISTERED PROFESSIONAL ENGINEER

VILLAGE SAFE WATER

MONTGOMERY WATSON
Anchorage, Alaska
IN ASSOCIATION WITH
EDC, INC.
725 W. Fireweed Lane
Anchorage, Alaska 99503

TOO'GHA INC. – TANANA, ALASKA
WATER DISTRIBUTION & WASTEWATER COLLECTION SYSTEM

SOIL TEST HOLE LOGS
(TH1 – TH12)

REVISION	BY	DATE
AGENCY REVIEW	MT	7/14/00
ISSUED FOR CONSTRUCTION	MT	5/2001
△1 RECORD DRAWING	MT	4/2005
△2 RECORD DRAWING	AY	5/2006

Project No. 1189078.010102
Date JULY 14, 2000
Designed MT
Drawn LF
Approved GM

Sheet No. G–9
SHEET ___ OF ___

JOB No.1189078.010102 TIME: 09-JUN-2006 10:24 FILE: C:\Proj\tanana\ws_lines\asbit-2006\G09.dgn

TEST HOLE 13 (TH-13)

Date Drilled: August 29, 1997
Contractor: Hughes Drilling Co.
Rig Type: CME-45 on truck w/ hollow stem
Logged By: W. Phillips, P.G.
Elevation: -
3rd btwn City & Util shops, S

Depth (feet) | Samples | Graphic Log | Frozen

Description

- SANDY GRAVEL: (FILL)
- ORGANIC SILT: (OL) Black w/ some Sand
- SILT: (ML) Brown w/ mottled gray, grading to very fine Silty Sand (SM), little to no visible ice (Nbn), occasional very small crystals below 8', moderate bond
- SANDY GRAVEL: (GP-GM) Gray-brown w/ layers of Gravelly Sand (SW-SM), clasts to 2" between 11.5' and 12', elsewhere generally <1" max. diameter
- SANDY GRAVEL: (GP) Gray

Placed 0.75" diameter solid PVC to 20

TEST HOLE 14 (TH-14)

Date Drilled: August 29, 1997
Contractor: Hughes Drilling Co.
Rig Type: CME-45 on truck w/ hollow stem
Logged By: W. Phillips, P.G.
Elevation: -
School St btwn 2nd & 3rd, 14 ft W

Depth (feet) | Samples | Graphic Log | Frozen

Description

- PEAT: (Pt) Organic mat w/ mixed Sandy Grave
- ORGANIC SILT: (OL) Black
- SILT: (ML) Brown w/ mottled gray silt and organic material
- SANDY GRAVEL: (GP-GM) Layered sand and gravel
- GRAVELLY SAND: (SP-SM) Gray-brown, max. clast 1.5", clean

Placed 0.75" diameter solid PVC pipe to 20

TEST HOLE 15 (TH-15)

Date Drilled: August 29, 1997
Contractor: Hughes Drilling Co.
Rig Type: CME-45 on truck w/ hollow stem
Logged By: W. Phillips, P.G.
Elevation: -
3rd btwn School & Mills, S edge

Depth (feet) | Samples | Graphic Log | Frozen

Description

- PEAT: (Pt) Organic mat and sand
- SANDY GRAVEL: (FILL) Road fill
- ORGANIC SILT: (OL) Black w/ sand
- SILT: (ML) Brown w/ gray streaks, no visible ice, Nbn
- SANDY GRAVEL: (GP-GM) Gray-brown w/ sandy zones (SP-SM), generally "-2" maximum size, larger clasts (to 3") @ 8' and 10'
- <1% visible ice (Vs+V+) at 16'

Placed 0.75" diameter solid PVC pipe to 20

TEST HOLE 16 (TH-16)

Date Drilled: August 29, 1997
Contractor: Hughes Drilling Co.
Rig Type: CME-45 on truck w/ hollow stem
Logged By: W. Phillips, P.G.
Elevation: -
1st & Mills, NW corner

Depth (feet) | Samples | Graphic Log | Frozen

Description

- SANDY GRAVEL (FILL) Brown Sandy Gravel/ Gravelly Sand, road fill
- ORGANIC SILT: (OL) Black, dry, loose
- SILT: (ML) Brown w/ mottled gray, dry, loose
- SANDY GRAVEL: (SP) Gray, hard frost bond, Nbn
- GRAVELLY SAND: (SP-SM) Brown, <1" maximum diameter, weak to moderate bond, little visible ice except for <1% Vx-Vc in some layers
- Gravelly Sand w/ some Silt (SM) at 20'

Placed 0.75" diameter solid PVC pipe to 19

TEST HOLE 17 (TH-17)

Date Drilled: August 29, 1997
Contractor: Hughes Drilling Co.
Rig Type: CME-45 on truck w/ hollow stem
Logged By: W. Phillips, P.G.
Elevation: -
Park & Garden, SE corner

Depth (feet) | Samples | Graphic Log | Frozen

Description

- SANDY GRAVEL: (GP)
- ORGANIC SILT: (OL) Black
- SILT: (ML) Brown w/ mottled gray, trace organic material, including roots
- SANDY GRAVEL: (GP-GM) Gray, moderately strong frost bond.
- Layer of Gravelly Sand w/ some Silt (SM) at 10'
- 2% visible ice at 14'
- 5% visible ice in a 2" section @ 19', elsewhere 2% visible ice

Placed solid 0.75" diameter solid PVC pipe to 20

TEST HOLE 18 (TH-18)

Date Drilled: August 29, 1997
Contractor: Public Health Service
Rig Type: John Deere 660 Backhoe
Logged By: W. Phillips, P.G.
Elevation: -
3rd & Garden, N edge

Depth (feet) | Samples | Graphic Log | Frozen

Description

- SANDY GRAVEL: (FILL) Brown w/ some silt, FILL
- ORGANIC SILT: (OL) Black
- SILT: (ML) Gray-brown mottled Silt grading to Fine Sand below 10'
- SANDY GRAVEL: (GP-GM) Gray w/ lenses of Gravelly Sand w/ some Silt (SM), moderate frost bond, no visible ice, Nbn

NOTES:
1. FIELD NOTES SHOULD BE RESEARCHED ALONG WITH THE PLAN INFORMATION, IN ANY FUTURE DIGGING, OR DESIGNING.
2. TEXT ONLY WAS CHANGED. DESIGN WAS NOT CHANGED. △2

RECORD DRAWING CERTIFICATE
THESE DRAWINGS REFLECT RECORDED INFORMATION OBTAINED DURING CONSTRUCTION. INFORMATION PROVIDED HEREIN IS ACCURATE TO THE BEST OF MY KNOWLEDGE.
NAME: Allyn E. Yarborough DATE: 6/1/06
STATE OF ALASKA 49TH ALLYN E. YARBOROUGH No. CE-4542 REGISTERED PROFESSIONAL ENGINEER

VILLAGE SAFE WATER

MONTGOMERY WATSON Anchorage, Alaska
IN ASSOCIATION WITH
EDC, INC. 333 W. 5th Avenue, Suite 1 Anchorage, AK 99501

TOO'GHA INC. - TANANA, ALASKA
WATER DISTRIBUTION & WASTEWATER COLLECTION SYSTEM

SOIL TEST HOLE LOGS (TH13 - TH18)

REVISION	BY	DATE
AGENCY REVIEW	MT	7/14/00
ISSUED FOR CONSTRUCTION	MT	5/2001
△1 RECORD DRAWING	MT	4/2005
△2 RECORD DRAWING	AY	5/2006

Project No. 1189078.010102
Date JULY 14, 2000
Designed MT
Drawn LF
Approved GM

Sheet No. G-10
SHEET ___ OF ___

JOB No.1189078.01010 09-JUN-2005 10:25 FILE: C:\Proj\tanana\wa_lines\asbit-2006\G10.DGN

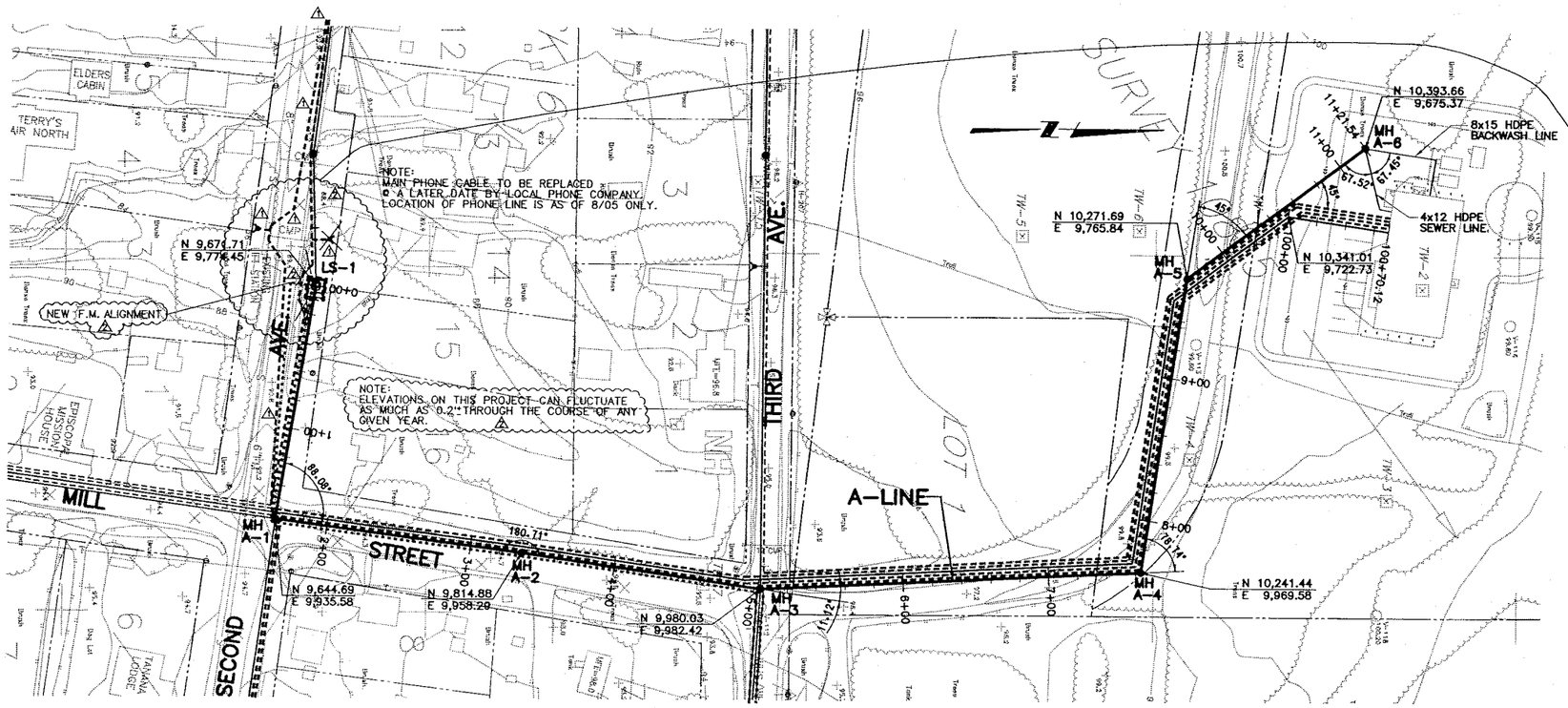

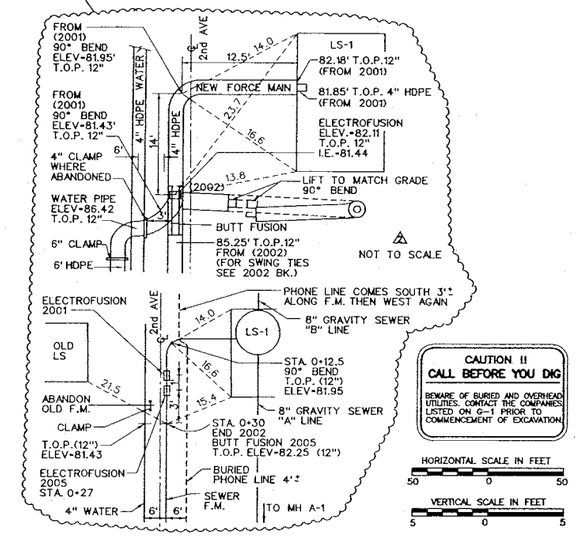

CAUTION !!
CALL BEFORE YOU DIG
BEWARE OF BURIED AND OVERHEAD UTILITIES. CONTACT THE COMPANIES LISTED ON G-1 PRIOR TO COMMENCEMENT OF EXCAVATION.

HORIZONTAL SCALE IN FEET
50 0 50

VERTICAL SCALE IN FEET
5 0 5

NOTES:
1. FIELD NOTES SHOULD BE RESEARCHED ALONG WITH THE PLAN INFORMATION, IN ANY FUTURE DIGGING, OR DESIGNING.
2. TEXT ONLY WAS CHANGED. DESIGN WAS NOT CHANGED. △

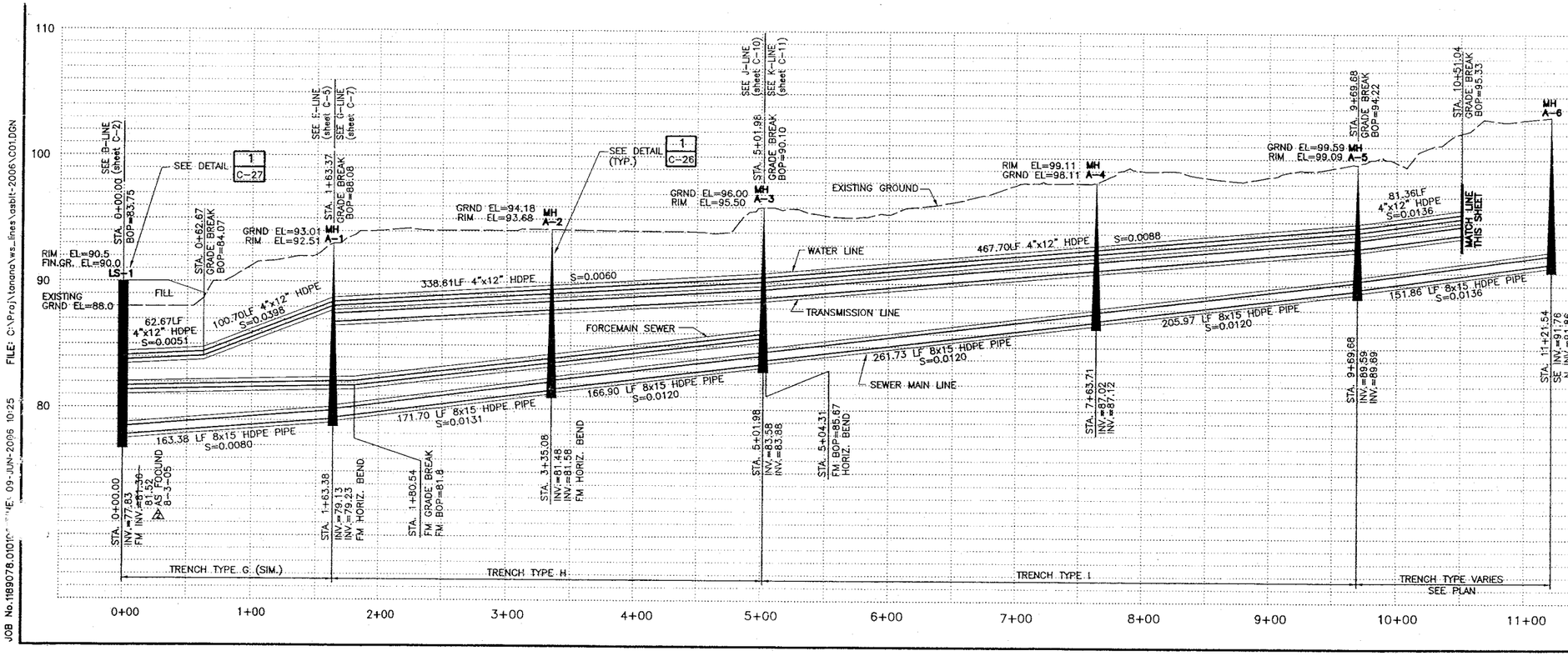

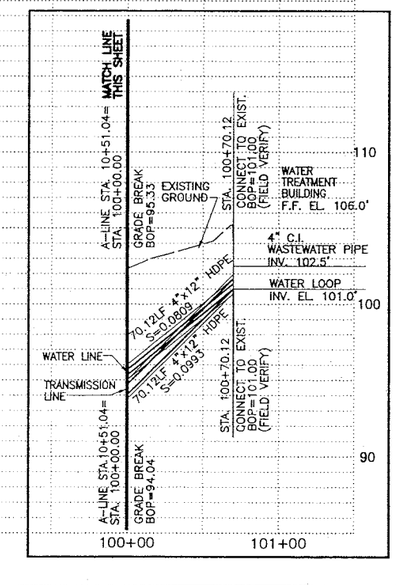

RECORD DRAWING CERTIFICATE
THESE DRAWINGS REFLECT RECORDED INFORMATION OBTAINED DURING CONSTRUCTION. INFORMATION PROVIDED HEREIN IS ACCURATE TO THE BEST OF MY KNOWLEDGE.
NAME Allyn E Yoder DATE 4/4/06

STATE OF ALASKA 19TH ALLYN E. YOKUM No. CE 9606 REGISTERED PROFESSIONAL ENGINEER

VILLAGE SAFE WATER

STATE OF ALASKA 19TH MELINDA A. TSU CE-9606 REGISTERED PROFESSIONAL ENGINEER

MONTGOMERY WATSON Anchorage, Alaska
IN ASSOCIATION WITH
EDC, INC. 310 K Street, Suite 200 Anchorage, AK 99501

TOO'GHA INC. – TANANA, ALASKA
WATER DISTRIBUTION & WASTEWATER COLLECTION SYSTEM

A – LINE SEWER AND WATER PLAN AND PROFILE

REVISION	BY	DATE
AGENCY REVIEW	MT	7/14/00
ISSUED FOR CONSTRUCTION	MT	5/2001
△1 RECORD DRAWING	MT	4/2005
△2 RECORD DRAWING	AY	5/2006

Project No. 1189078.010102
Date JULY 14, 2000
Designed MT
Drawn LF
Approved GM

Sheet No. C-1
SHEET ___ OF ___

FILE: C:\Proj\tanana\ws_lines\asbit-2006\C01.DGN
DATE: 09-JUN-2006 10:25
JOB No.1189078.010102

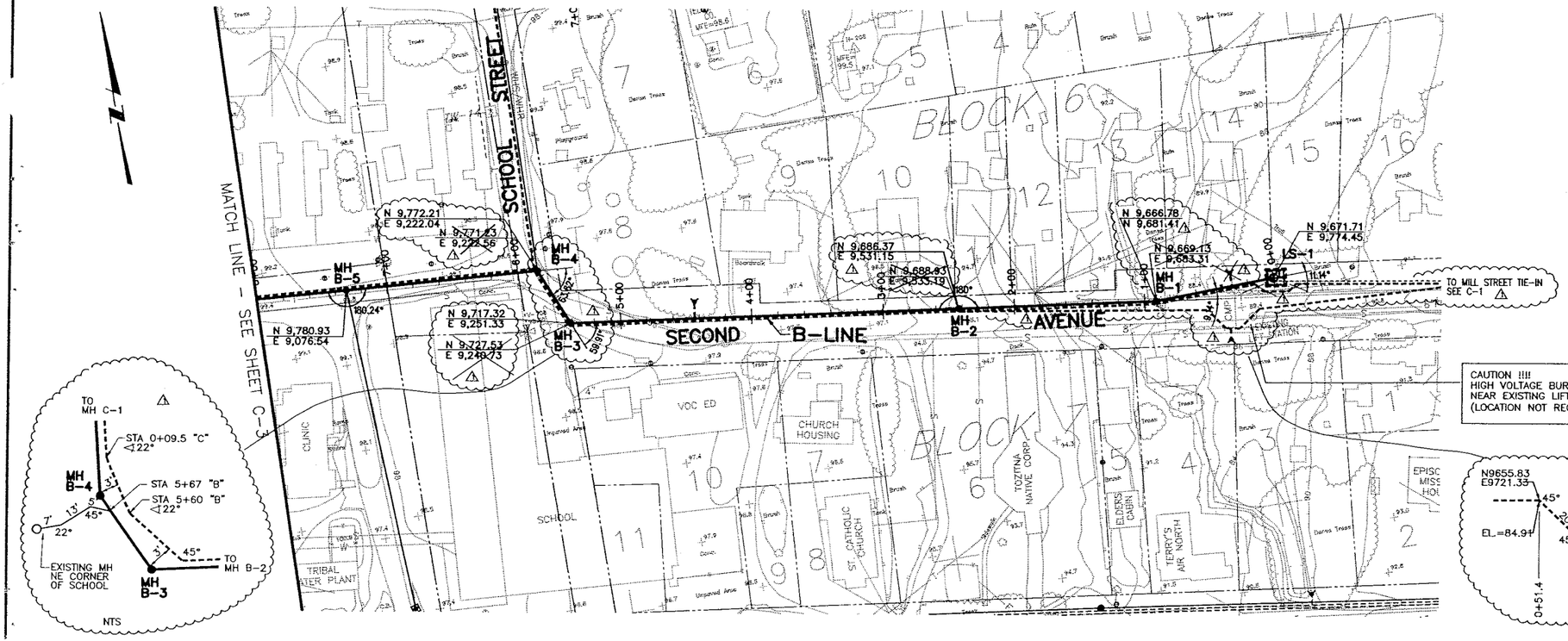

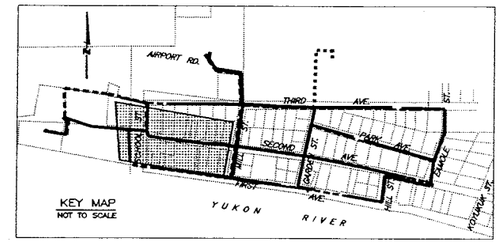

NOTES:
1. FIELD NOTES SHOULD BE RESEARCHED ALONG WITH THE PLAN INFORMATION, IN ANY FUTURE DIGGING, OR DESIGNING.
2. TEXT ONLY WAS CHANGED. DESIGN WAS NOT CHANGED. △

CAUTION !!!!
HIGH VOLTAGE BURIED CABLE NEAR EXISTING LIFT STATION (LOCATION NOT RECORDED)

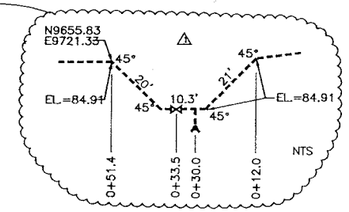

CAUTION !!
CALL BEFORE YOU DIG
BEWARE OF BURIED AND OVERHEAD UTILITIES. CONTACT THE COMPANIES LISTED ON C-1 PRIOR TO COMMENCEMENT OF EXCAVATION.

HORIZONTAL SCALE IN FEET
50 0 50

VERTICAL SCALE IN FEET
5 0 5

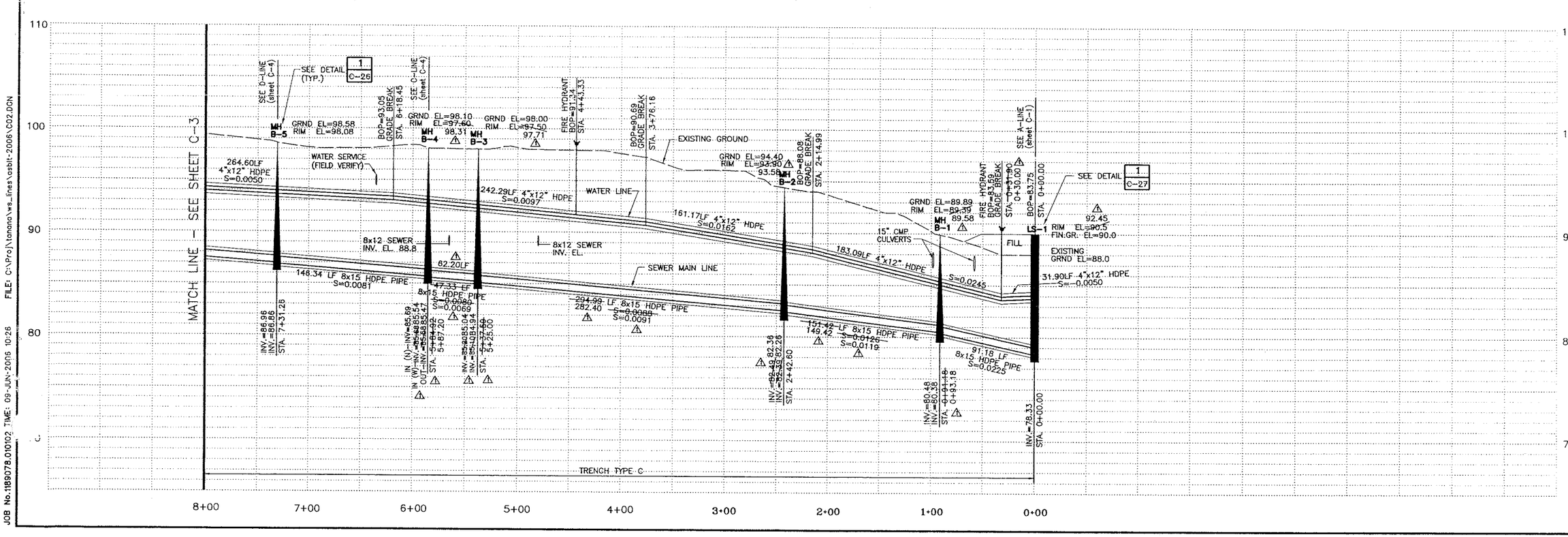

RECORD DRAWING CERTIFICATE
THESE DRAWINGS REFLECT RECORDED INFORMATION OBTAINED DURING CONSTRUCTION. INFORMATION PROVIDED HEREIN IS ACCURATE TO THE BEST OF MY KNOWLEDGE.
NAME Allen E. Jackson DATE 6/16/06

STATE OF ALASKA ALLEN E. JACKSON 9TH REGISTERED PROFESSIONAL ENGINEER

VILLAGE SAFE WATER

STATE OF ALASKA MELINDA A. TSU 4TH REGISTERED PROFESSIONAL ENGINEER CE-9606

MONTGOMERY WATSON
Anchorage, Alaska
IN ASSOCIATION WITH
EDC, INC.
810 N. Street
Anchorage, AK 99501

TOO'GHA INC. – TANANA, ALASKA
WATER DISTRIBUTION & WASTEWATER COLLECTION SYSTEM

B - LINE SEWER AND WATER PLAN AND PROFILE

REVISION	BY	DATE
AGENCY REVIEW	MT	7/14/00
ISSUED FOR CONSTRUCTION	MT	5/2001
△ RECORD DRAWING	MT	4/2005
△ RECORD DRAWING	AY	5/2006

Project No. 1189078.010102
Date JULY 14, 2000
Designed MT
Drawn LF
Approved GM

Sheet No. C-2
SHEET ___ OF ___

JOB No.1189078.010102 TIME: 09-JUN-2006 10:26 FILE: C:\Proj\tanana\ws_lines\asbit-2006\C02.DGN

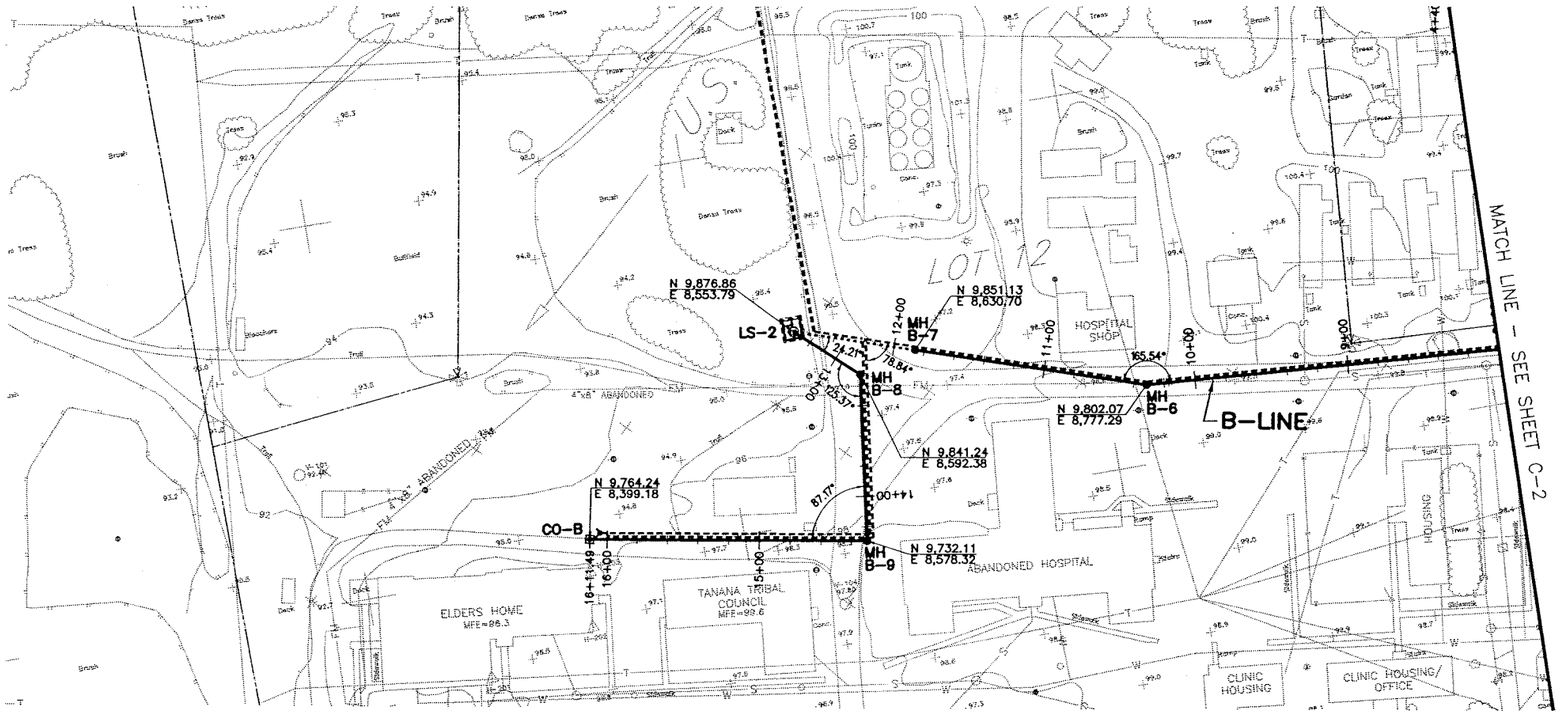

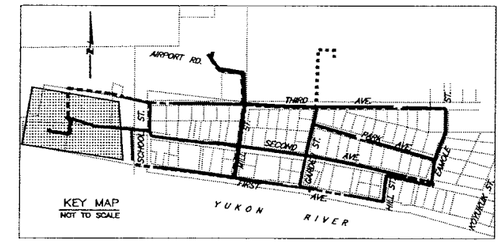

NOTES:
1. FIELD NOTES SHOULD BE RESEARCHED ALONG WITH THE PLAN INFORMATION, IN ANY FUTURE DIGGING, OR DESIGNING.
2. TEXT ONLY WAS CHANGED. DESIGN WAS NOT CHANGED. △

CAUTION !!
CALL BEFORE YOU DIG
BEWARE OF BURIED AND OVERHEAD UTILITIES. CONTACT THE COMPANIES LISTED ON G-1 PRIOR TO COMMENCEMENT OF EXCAVATION.

HORIZONTAL SCALE IN FEET
50 0 50

VERTICAL SCALE IN FEET
5 0 5

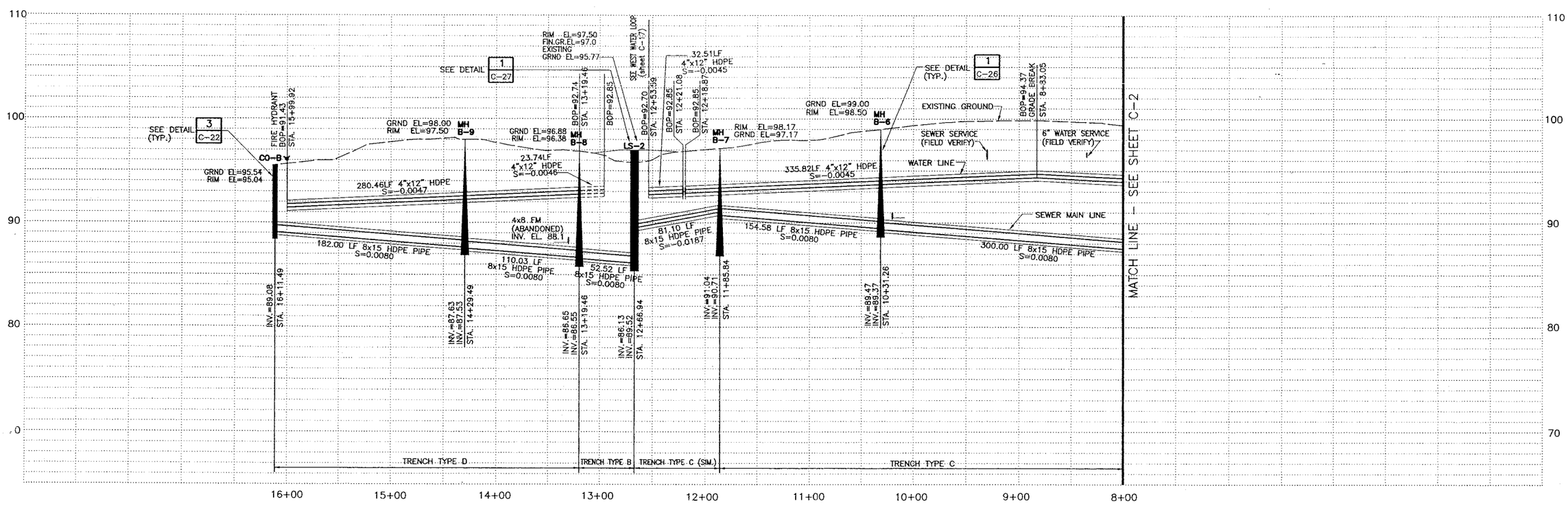

RECORD DRAWING CERTIFICATE
THESE DRAWINGS REFLECT RECORDED INFORMATION OBTAINED DURING CONSTRUCTION. INFORMATION PROVIDED HEREIN IS ACCURATE TO THE BEST OF MY KNOWLEDGE.
Allyn E. Parker 4/10/06
NAME DATE

STATE OF ALASKA ALLYN E. PARKER No. CE 4542 REGISTERED PROFESSIONAL ENGINEER

VILLAGE SAFE WATER

STATE OF ALASKA MELINDA A. TAI CE-9806 REGISTERED PROFESSIONAL ENGINEER

MONTGOMERY WATSON
Anchorage, Alaska
IN ASSOCIATION WITH
EDC, INC.
310 K Street, Suite 200
Anchorage, AK 99503

TOO'GHA INC. - TANANA, ALASKA
WATER DISTRIBUTION & WASTEWATER COLLECTION SYSTEM

B - LINE SEWER AND WATER PLAN AND PROFILE

REVISION	BY	DATE
AGENCY REVIEW	MT	7/14/00
ISSUED FOR CONSTRUCTION	MT	5/2001
△ RECORD DRAWING	MT	4/2005
△ RECORD DRAWING	AY	5/2006

Project No. 1189078.010102
Date JULY 14, 2000
Designed MT
Drawn LF
Approved GM

Sheet No. C-3
SHEET ___ OF ___

JOB No.1189078.010102 TIME: 09-JUN-2006 10:30 FILE: C:\Proj\tanana\ws_lines\gabit-2006\C03.DGN

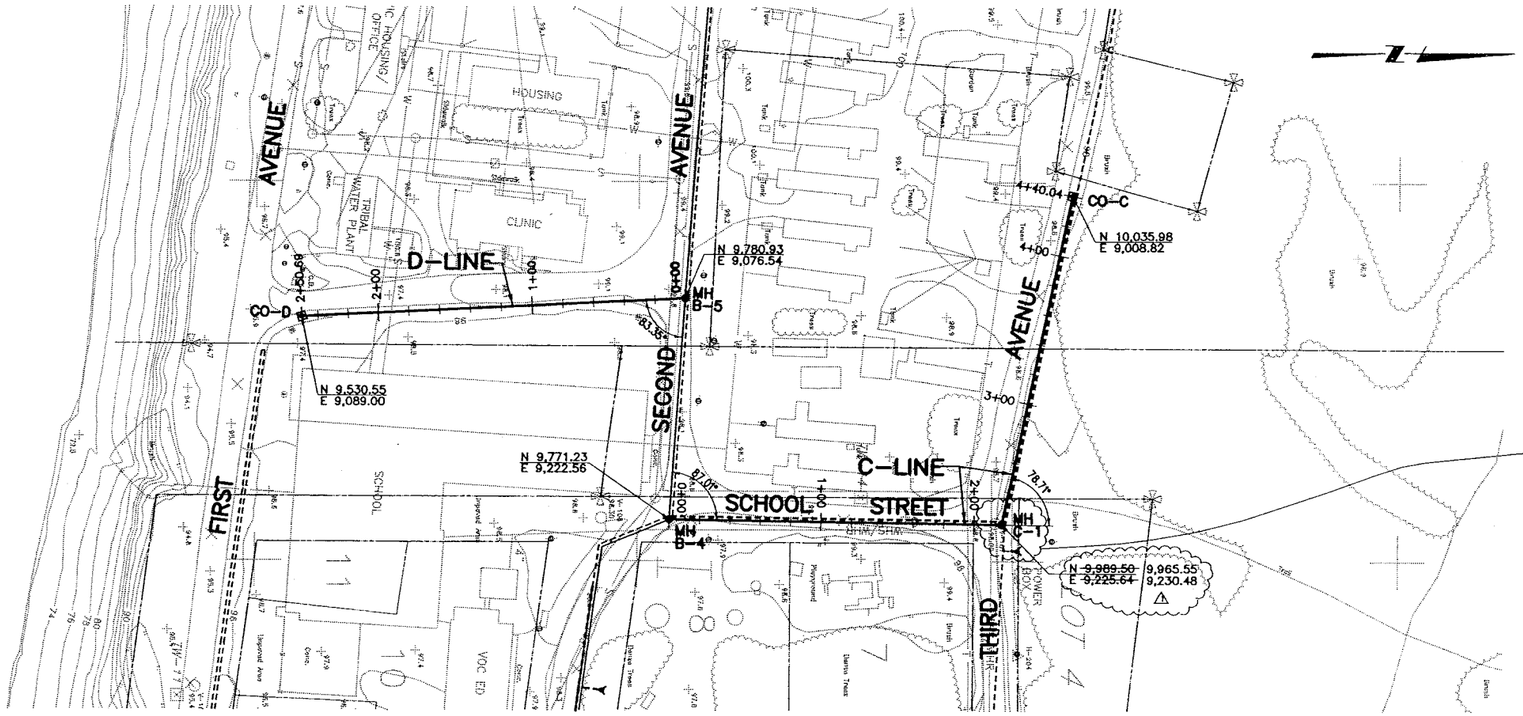

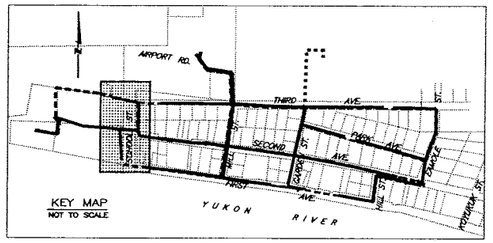

NOTES:
1. FIELD NOTES SHOULD BE RESEARCHED ALONG WITH THE PLAN INFORMATION, IN ANY FUTURE DIGGING, OR DESIGNING.
2. TEXT ONLY WAS CHANGED. DESIGN WAS NOT CHANGED. △2

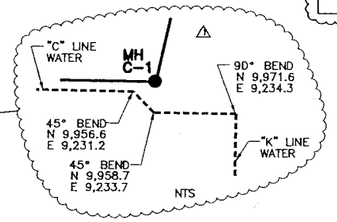

CAUTION !!
CALL BEFORE YOU DIG
BEWARE OF BURIED AND OVERHEAD UTILITIES. CONTACT THE COMPANIES LISTED ON G-1 PRIOR TO COMMENCEMENT OF EXCAVATION.

HORIZONTAL SCALE IN FEET
50 0 50

VERTICAL SCALE IN FEET
5 0 5

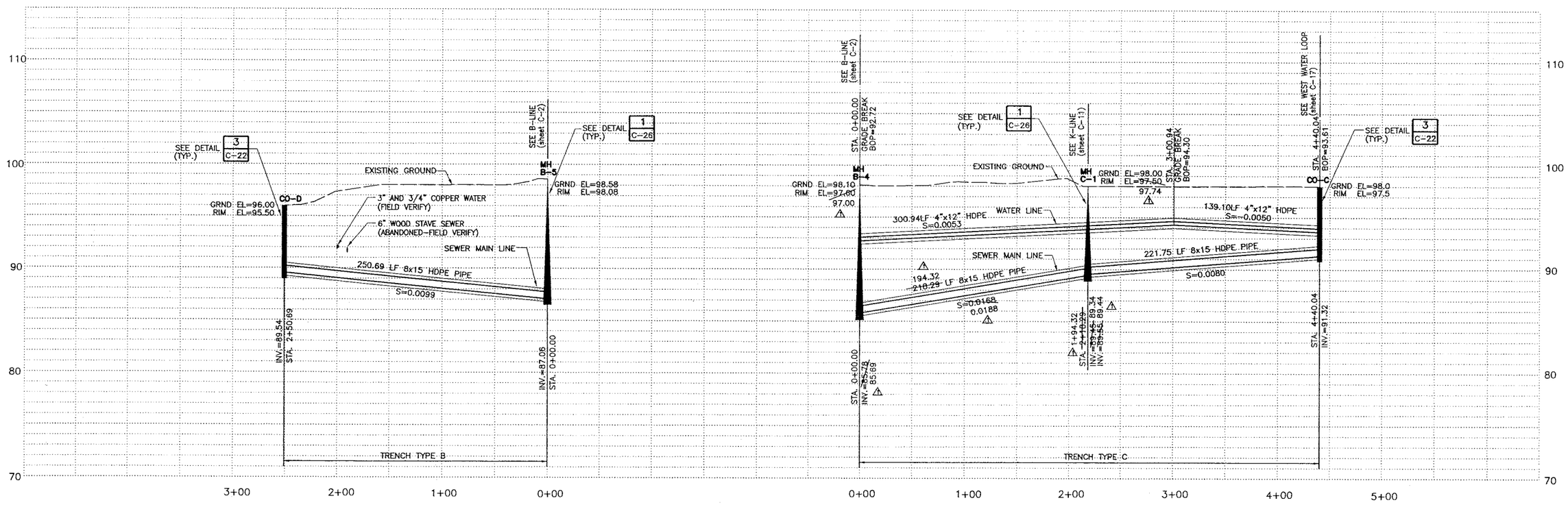

RECORD DRAWING CERTIFICATE
THESE DRAWINGS REFLECT RECORDED INFORMATION OBTAINED DURING CONSTRUCTION. HEREIN INFORMATION PROVIDED HEREIN IS ACCURATE TO THE BEST OF MY KNOWLEDGE.
Allen E Yoakum 4/4/06
NAME DATE

STATE OF ALASKA ALLEN E. YOAKUM No. CE 9808 REGISTERED PROFESSIONAL ENGINEER

VILLAGE SAFE WATER

STATE OF ALASKA ALLEN E. YOAKUM No. CE 9808 REGISTERED PROFESSIONAL ENGINEER

MONTGOMERY WATSON
Anchorage, Alaska
IN ASSOCIATION WITH
EDC, INC.
Anchorage, Alaska

TOO'GHA INC. – TANANA, ALASKA
WATER DISTRIBUTION & WASTEWATER COLLECTION SYSTEM

C – LINE AND D – LINE SEWER AND WATER PLAN AND PROFILE

REVISION	BY	DATE
AGENCY REVIEW	MT	7/14/00
ISSUED FOR CONSTRUCTION	MT	5/2001
△1 RECORD DRAWING	MT	4/2005
△2 RECORD DRAWING	AY	5/2006

Project No. 1189078.01010.2
Date JULY 14, 2000
Designed MT
Drawn LF
Approved GM

Sheet No. C-4
SHEET ___ OF ___

JOB No.1189078.01010 TIME: 09-JUN-2006 10:33 FILE: C:\Proj\tanana\ws_lines\asbit-2005\C04.DGN

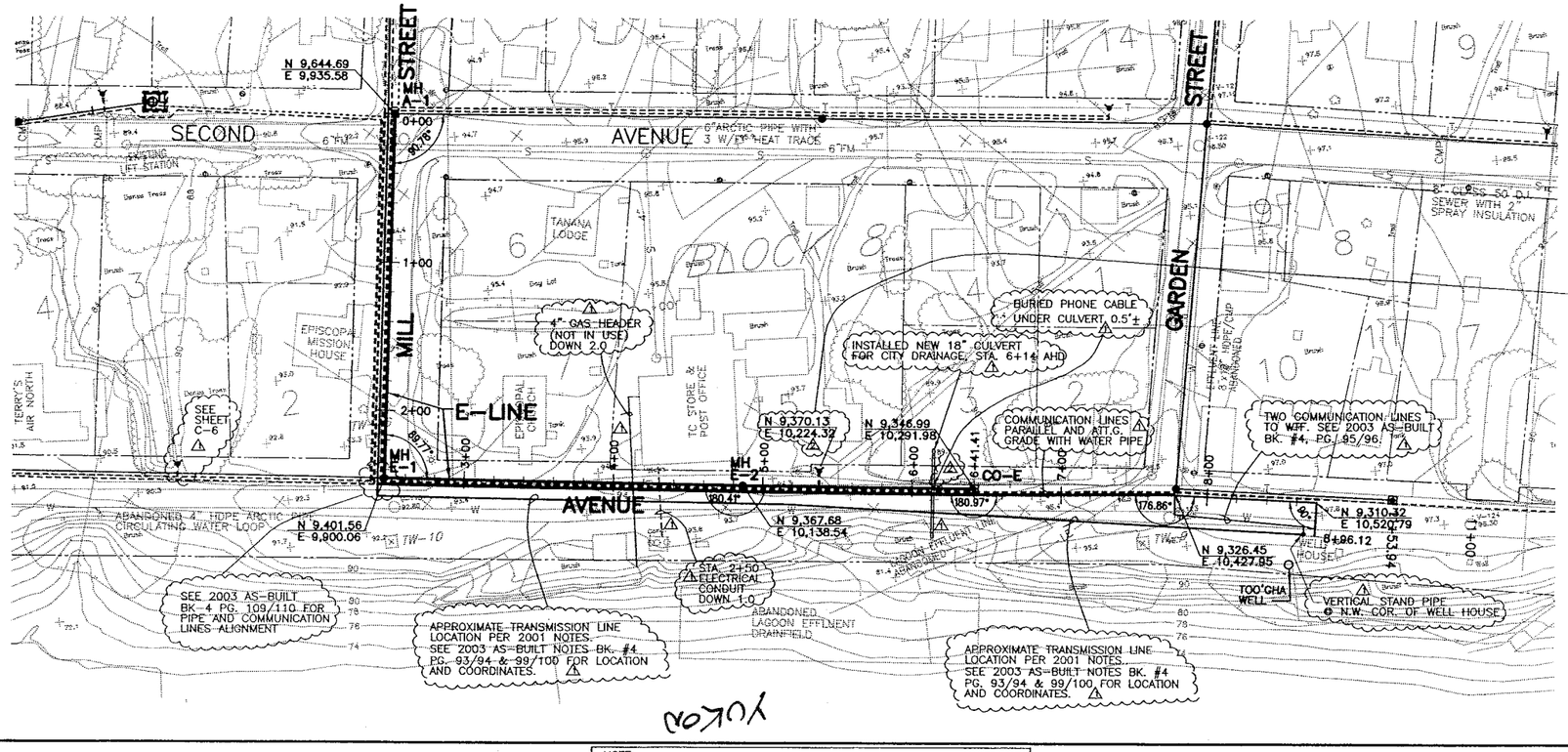

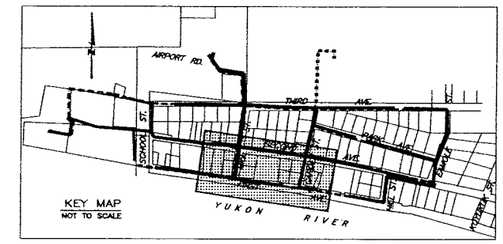

NOTES:
1. FIELD NOTES SHOULD BE RESEARCHED ALONG WITH THE PLAN INFORMATION, IN ANY FUTURE DIGGING, OR DESIGNING.
2. TEXT ONLY WAS CHANGED. DESIGN WAS NOT CHANGED. △

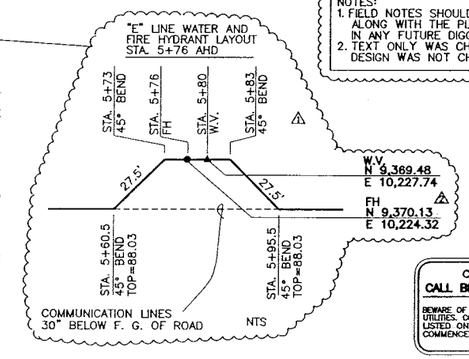

CAUTION !!
CALL BEFORE YOU DIG
BEWARE OF BURIED AND OVERHEAD UTILITIES. CONTACT THE COMPANIES LISTED ON G-1 PRIOR TO COMMENCEMENT OF EXCAVATION.

HORIZONTAL SCALE IN FEET
50 0 50

VERTICAL SCALE IN FEET
5 0 5

NOTE:
STATIONS SHOWN ARE AS FOUND IN 2003.
INVERTS, RIMS, AND COORDINATES WILL NEED TO BE VERIFIED (E-LINE).

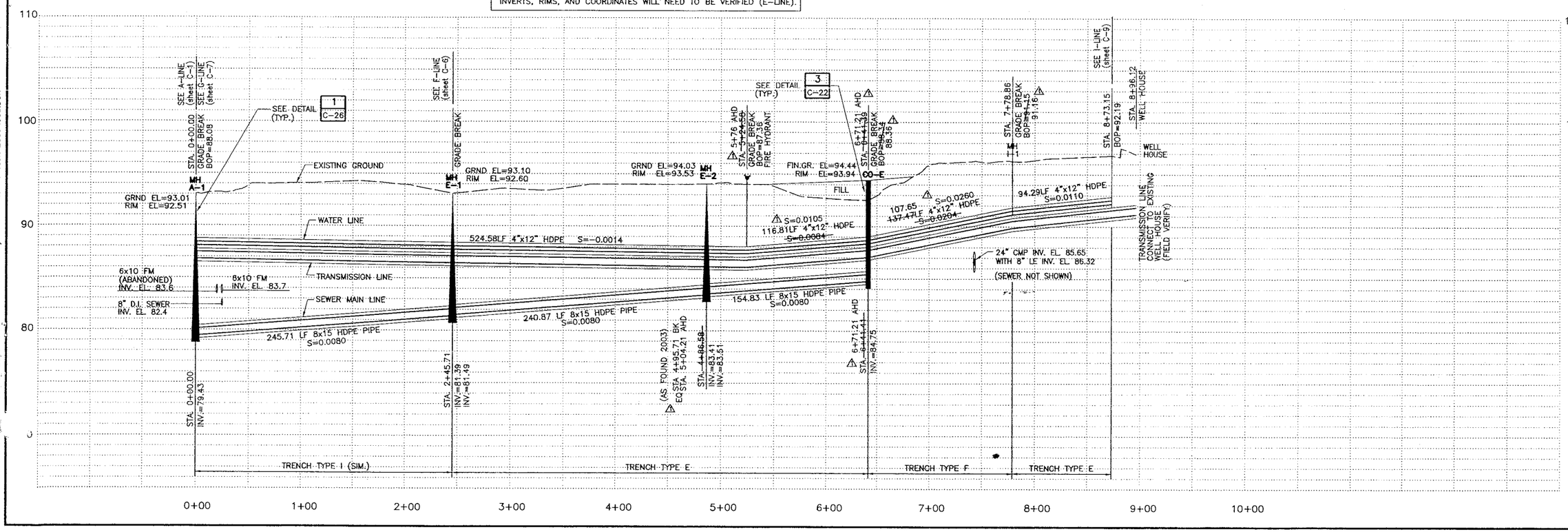

RECORD DRAWING CERTIFICATE
THESE DRAWINGS REFLECT RECORDED INFORMATION OBTAINED DURING CONSTRUCTION. INFORMATION PROVIDED HEREIN IS ACCURATE TO THE BEST OF MY KNOWLEDGE.
Allyn E. Yoakum 7/14/06
NAME DATE

STATE OF ALASKA 49TH ALLYN E. YOAKUM No. CE-4642 REGISTERED PROFESSIONAL ENGINEER

VILLAGE SAFE WATER

STATE OF ALASKA 49TH MELINDA A. TSAI CE-9606 REGISTERED PROFESSIONAL ENGINEER

MONTGOMERY WATSON
Anchorage, Alaska
IN ASSOCIATION WITH
EDC, INC.
813 W. Fireweed Ln.
Anchorage, AK 99503

TOO'GHA INC. - TANANA, ALASKA
WATER DISTRIBUTION & WASTEWATER COLLECTION SYSTEM
E - LINE & TRANASMISSION LINE (south end)
SEWER AND WATER PLAN AND PROFILE

REVISION	BY	DATE
AGENCY REVIEW	MT	7/14/00
ISSUED FOR CONSTRUCTION	MT	5/2001
△ RECORD DRAWING	MT	4/2005
△ RECORD DRAWING	AY	5/2006

Project No. 1189078.010102
Date JULY 14, 2000
Designed MT
Drawn LF
Approved GM

Sheet No. C-5
SHEET ___ OF ___

FILE: C:\Proj\tanana\ws_lines\asbit-2006\C05.DGN
JOB No.1189078.010102 TIME: 09-JUN-2006 10:36

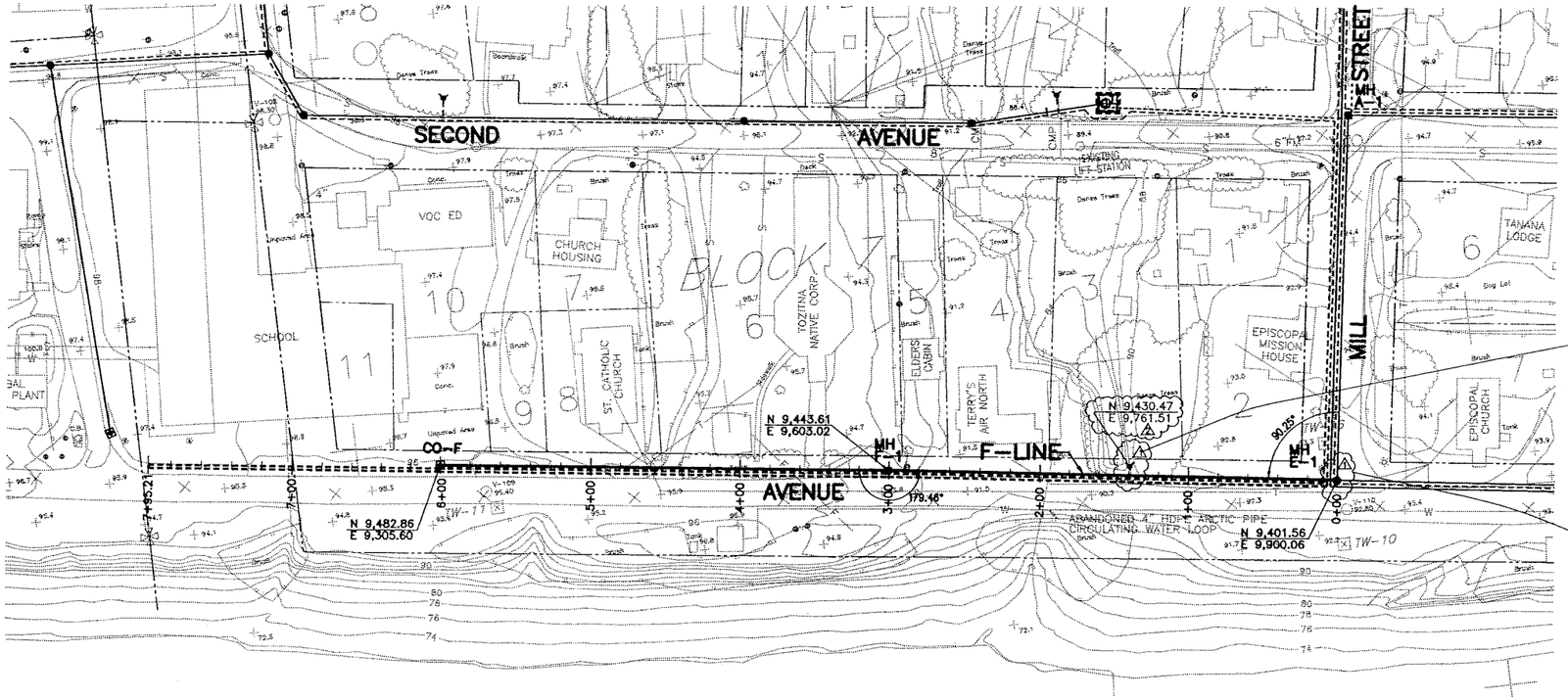

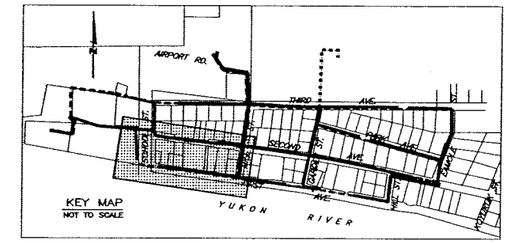

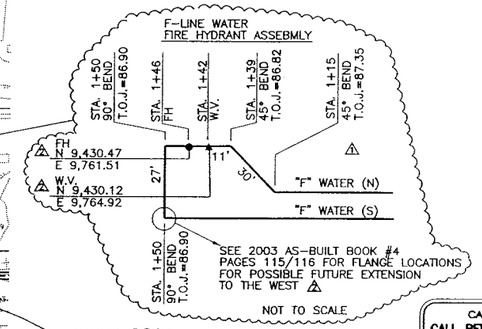

SEE 2003 AS-BUILT BK.#4-PG.109/110 FOR WATER PIPE ALIGNMENT

CAUTION !!
CALL BEFORE YOU DIG
BEWARE OF BURIED AND OVERHEAD UTILITIES. CONTACT THE COMPANIES LISTED ON G-1 PRIOR TO COMMENCEMENT OF EXCAVATION.

NOTES:
1. FIELD NOTES SHOULD BE RESEARCHED ALONG WITH THE PLAN INFORMATION, IN ANY FUTURE DIGGING, OR DESIGNING.
2. TEXT ONLY WAS CHANGED. DESIGN WAS NOT CHANGED.

HORIZONTAL SCALE IN FEET
50 0 50

VERTICAL SCALE IN FEET
5 0 5

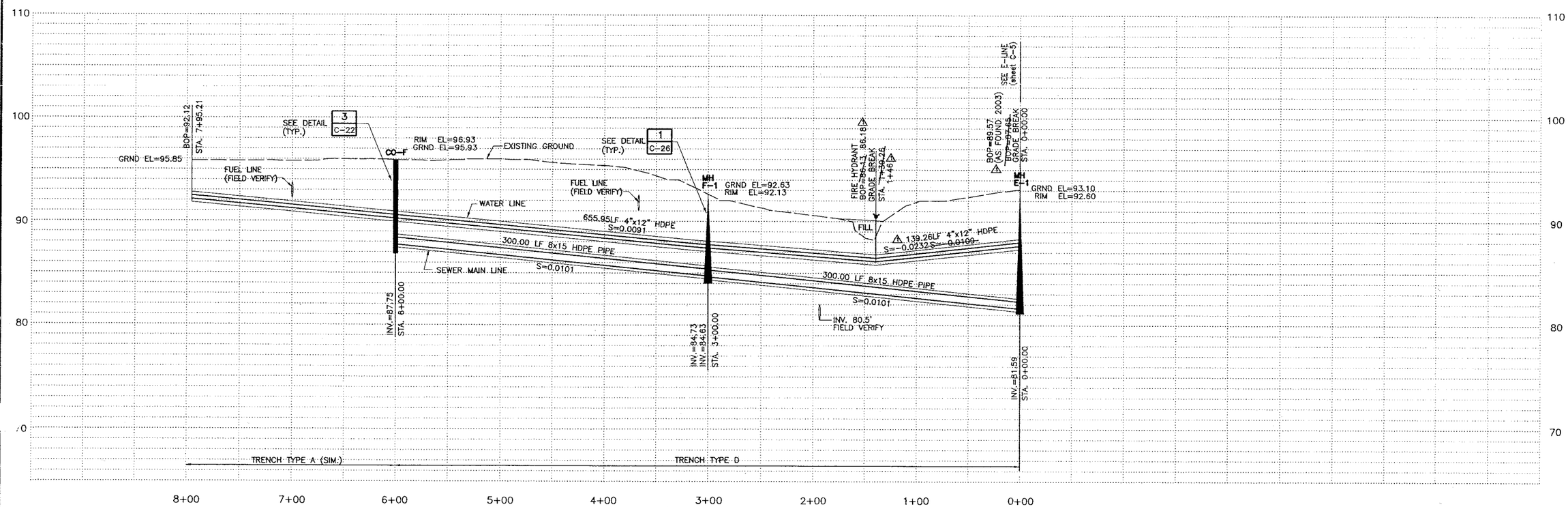

RECORD DRAWING CERTIFICATE
THESE DRAWINGS REFLECT RECORDED INFORMATION OBTAINED DURING CONSTRUCTION. INFORMATION PROVIDED HEREIN IS ACCURATE TO THE BEST OF MY KNOWLEDGE.
NAME Allyn E. Yoakum DATE 6/16/06
STATE OF ALASKA 49TH ALLYN E. YOAKUM No. CE 4342 REGISTERED PROFESSIONAL ENGINEER

VILLAGE SAFE WATER

STATE OF ALASKA 49TH MELINDA A. TSU No. CE-9803 REGISTERED PROFESSIONAL ENGINEER

MONTGOMERY WATSON
Anchorage, Alaska
IN ASSOCIATION WITH
EDC, INC.
ENGINEERING DESIGN CONSULTANTS

TOO'GHA INC. – TANANA, ALASKA
WATER DISTRIBUTION & WASTEWATER COLLECTION SYSTEM
F - LINE SEWER AND WATER PLAN AND PROFILE

REVISION	BY	DATE
AGENCY REVIEW	MT	7/14/00
ISSUED FOR CONSTRUCTION	MT	5/2001
△1 RECORD DRAWING	MT	4/2005
△2 RECORD DRAWING	AY	5/2006

Project No. 1189078.010102
Date JULY 14, 2000
Designed MT
Drawn LF
Approved GM

Sheet No. C-6
SHEET ___ OF ___

JOB No.1189078.010102 TIME: 09-JUN-2006 10:37 FILE: C:\Proj\tanana\wa_lines\asbit-2006\C06.DGN

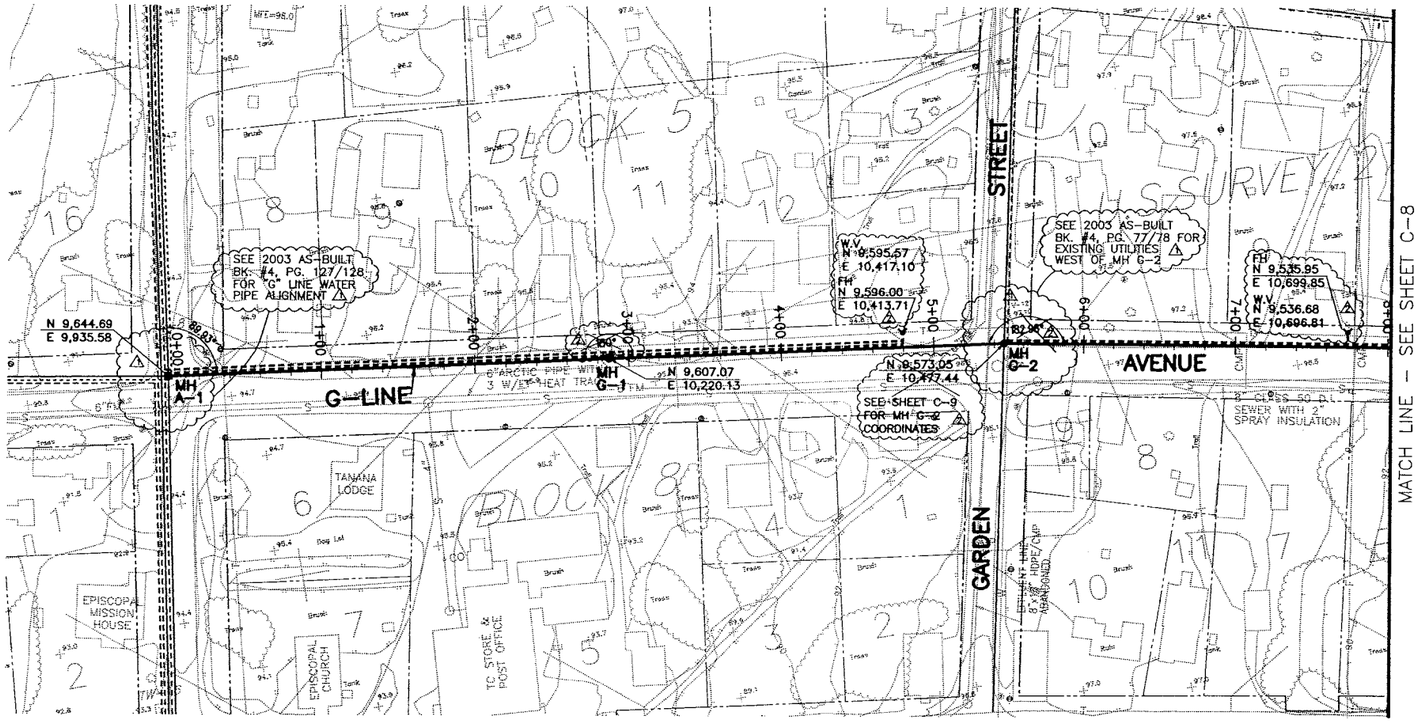

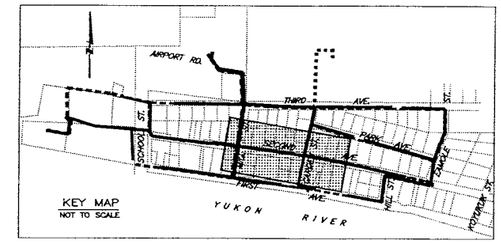

NOTES:
1. FIELD NOTES SHOULD BE RESEARCHED ALONG WITH THE PLAN INFORMATION, IN ANY FUTURE DIGGING, OR DESIGNING.
2. TEXT ONLY WAS CHANGED, DESIGN WAS NOT CHANGED. △1

CAUTION !!
CALL BEFORE YOU DIG
BEWARE OF BURIED AND OVERHEAD UTILITIES. CONTACT THE COMPANIES LISTED ON G-1 PRIOR TO COMMENCEMENT OF EXCAVATION.

HORIZONTAL SCALE IN FEET
50 0 50

VERTICAL SCALE IN FEET
5 0 5

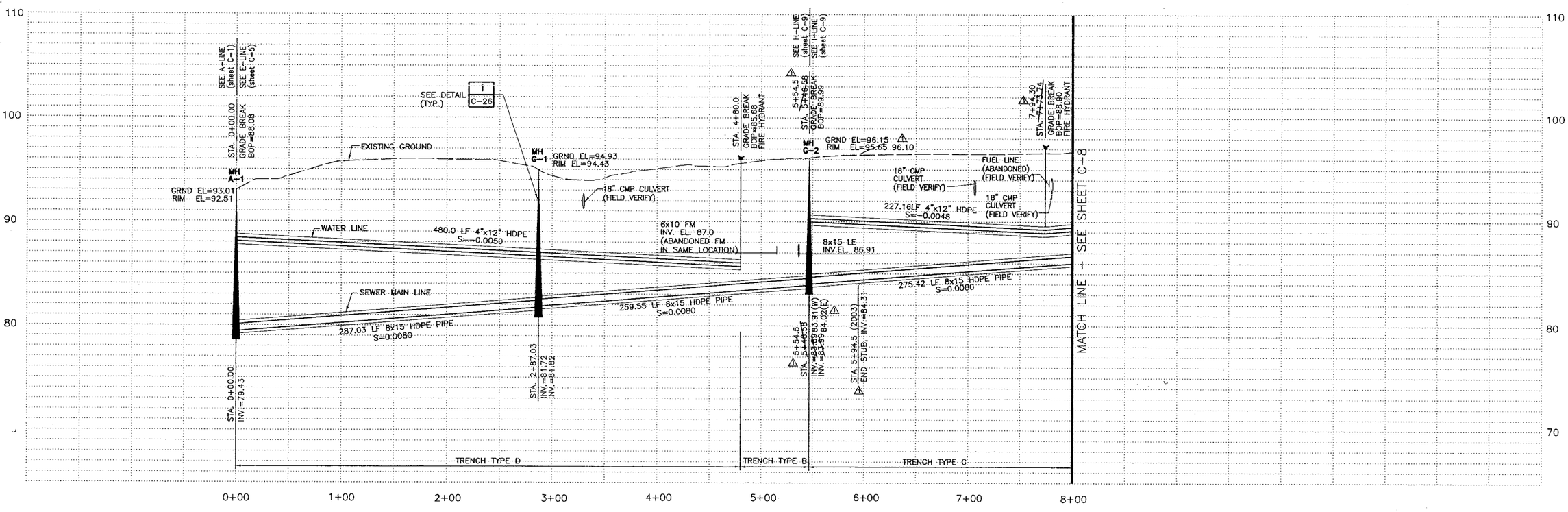

RECORD DRAWING CERTIFICATE
THESE DRAWINGS REFLECT RECORDED INFORMATION OBTAINED DURING CONSTRUCTION. INFORMATION PROVIDED HEREIN IS ACCURATE TO THE BEST OF MY KNOWLEDGE.
Allyn E. Yoakum 8/16/06
NAME DATE

STATE OF ALASKA
ALLYN E. YOAKUM
CE-9606
REGISTERED PROFESSIONAL ENGINEER

VILLAGE SAFE WATER

STATE OF ALASKA
MELINDA A. TAU
CE-9805
REGISTERED PROFESSIONAL ENGINEER

MONTGOMERY WATSON
Anchorage, Alaska
IN ASSOCIATION WITH
EDC, INC.
135 E. Fireweed Ln.
Anchorage, AK 99503

TOO'GHA INC. - TANANA, ALASKA
WATER DISTRIBUTION & WASTEWATER COLLECTION SYSTEM

G - LINE SEWER AND WATER PLAN AND PROFILE

REVISION	BY	DATE
AGENCY REVIEW	MT	7/14/00
ISSUED FOR CONSTRUCTION	MT	5/2001
△1 RECORD DRAWING	MT	4/2005
△1 RECORD DRAWING	AY	5/2006

Project No. 1189078.010102
Date JULY 14, 2000
Designed MT
Drawn LF
Approved GM

Sheet No. C-7
SHEET ___ OF ___

JOB No.1189078.010102 TIME: 09-JUN-2006 10:37 FILE: C:\Proj\tanana\ws_lines\cabit-2006\C07.DGN

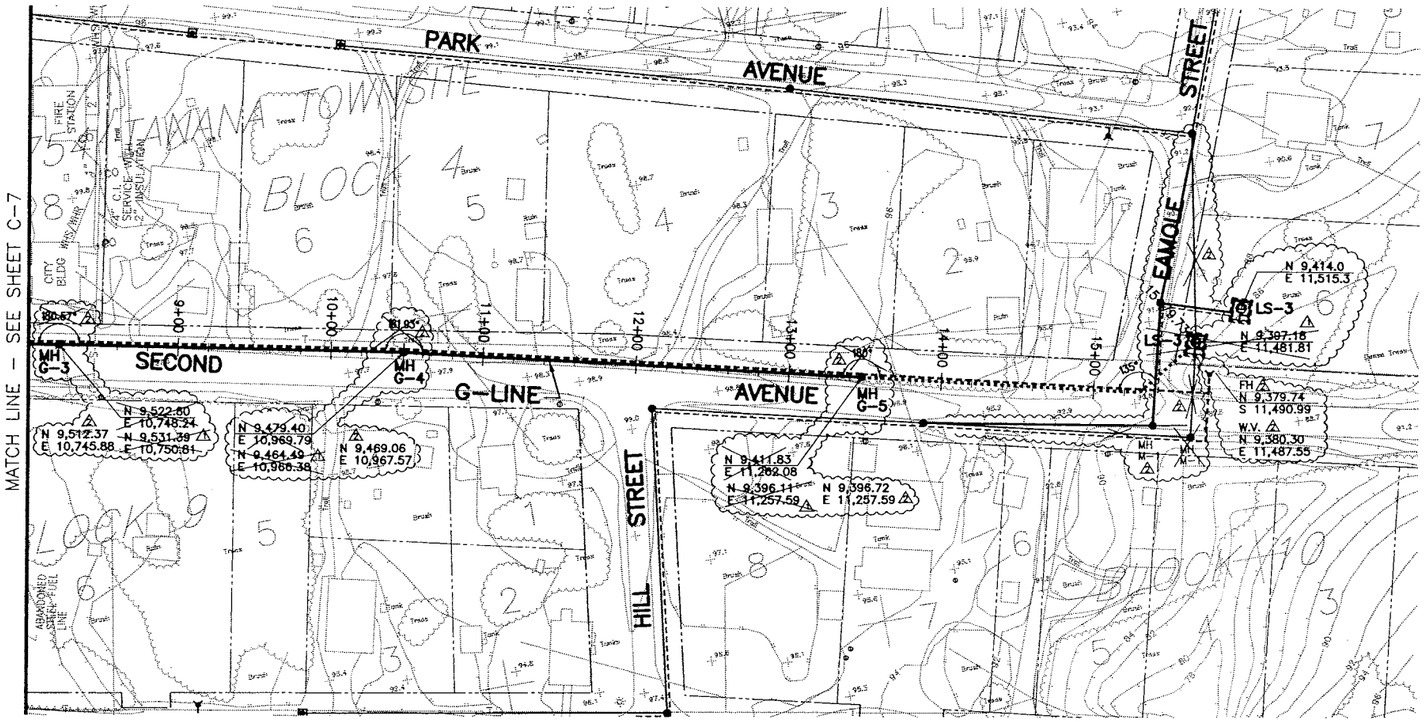

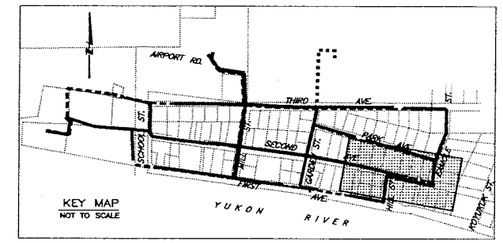

NOTES:
1. FIELD NOTES SHOULD BE RESEARCHED ALONG WITH THE PLAN INFORMATION, IN ANY FUTURE DIGGING, OR DESIGNING.
2. TEXT ONLY WAS CHANGED. DESIGN WAS NOT CHANGED. △2

CAUTION !!
CALL BEFORE YOU DIG
BEWARE OF BURIED AND OVERHEAD UTILITIES. CONTACT THE COMPANIES LISTED ON G-1 PRIOR TO COMMENCEMENT OF EXCAVATION.

HORIZONTAL SCALE IN FEET
50 0 50

VERTICAL SCALE IN FEET
5 0 5

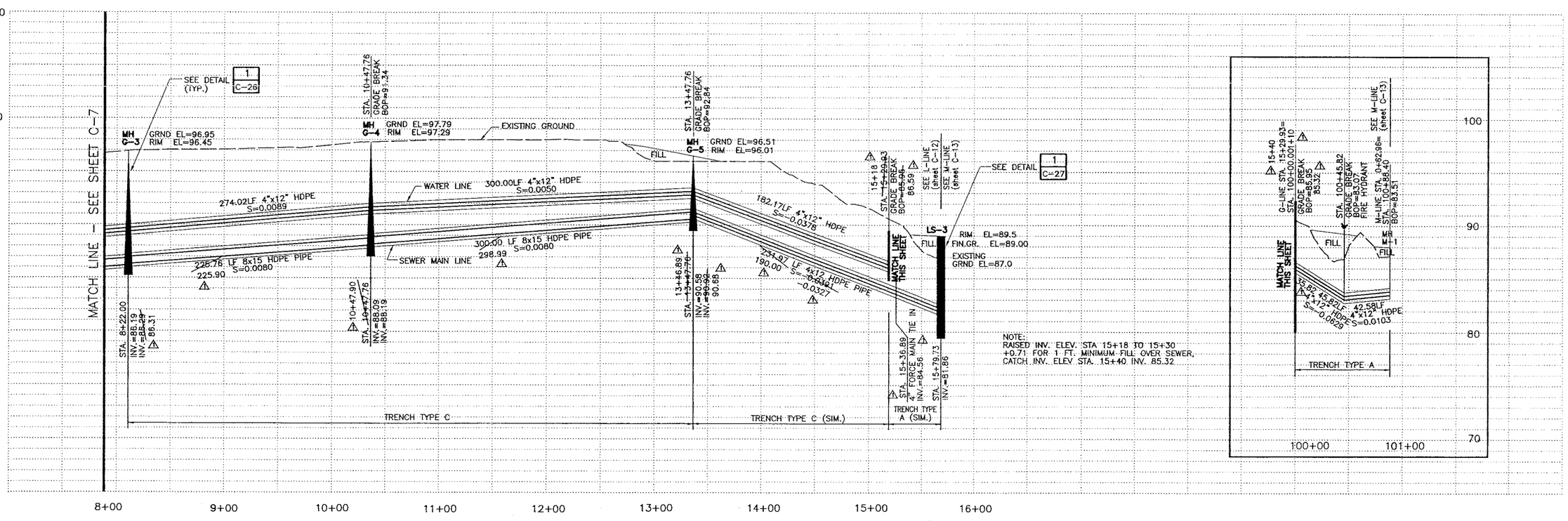

NOTE:
RAISED INV. ELEV. STA 15+18 TO 15+30 +0.71 FOR 1 FT. MINIMUM FILL OVER SEWER. CATCH INV. ELEV STA. 15+40 INV. 85.32

RECORD DRAWING CERTIFICATE
THESE DRAWINGS REFLECT RECORDED INFORMATION OBTAINED DURING CONSTRUCTION. INFORMATION PROVIDED HEREIN IS ACCURATE TO THE BEST OF MY KNOWLEDGE.
NAME: Allyne E. Yoakum
DATE: 6/1/06

STATE OF ALASKA 49TH ALLYNE E. YOAKUM No. CE-9805 REGISTERED PROFESSIONAL ENGINEER

VILLAGE SAFE WATER

STATE OF ALASKA 49TH WILLIAM A. TAN No. CE-9805 REGISTERED PROFESSIONAL ENGINEER

MONTGOMERY WATSON
Anchorage, Alaska
IN ASSOCIATION WITH
EDC, INC.
1051 W. Fireweed
Anchorage, AK 99503

TOO'GHA INC. – TANANA, ALASKA
WATER DISTRIBUTION & WASTEWATER COLLECTION SYSTEM

G - LINE SEWER AND WATER PLAN AND PROFILE

REVISION	BY	DATE
AGENCY REVIEW	MT	7/14/00
ISSUED FOR CONSTRUCTION	MT	5/2001
△1 RECORD DRAWING	MT	4/2005
△2 RECORD DRAWING	AY	5/2006

Project No. 1189078.010102
Date JULY 14, 2000
Designed MT
Drawn LF
Approved GM

Sheet No. C-8
SHEET ___ OF ___

JOB No.1189078.010102 TIME: 09-JUN-2006 10:38 FILE: C:\Proj\tanana\ws_lines\asbit-2006\C08.DGN

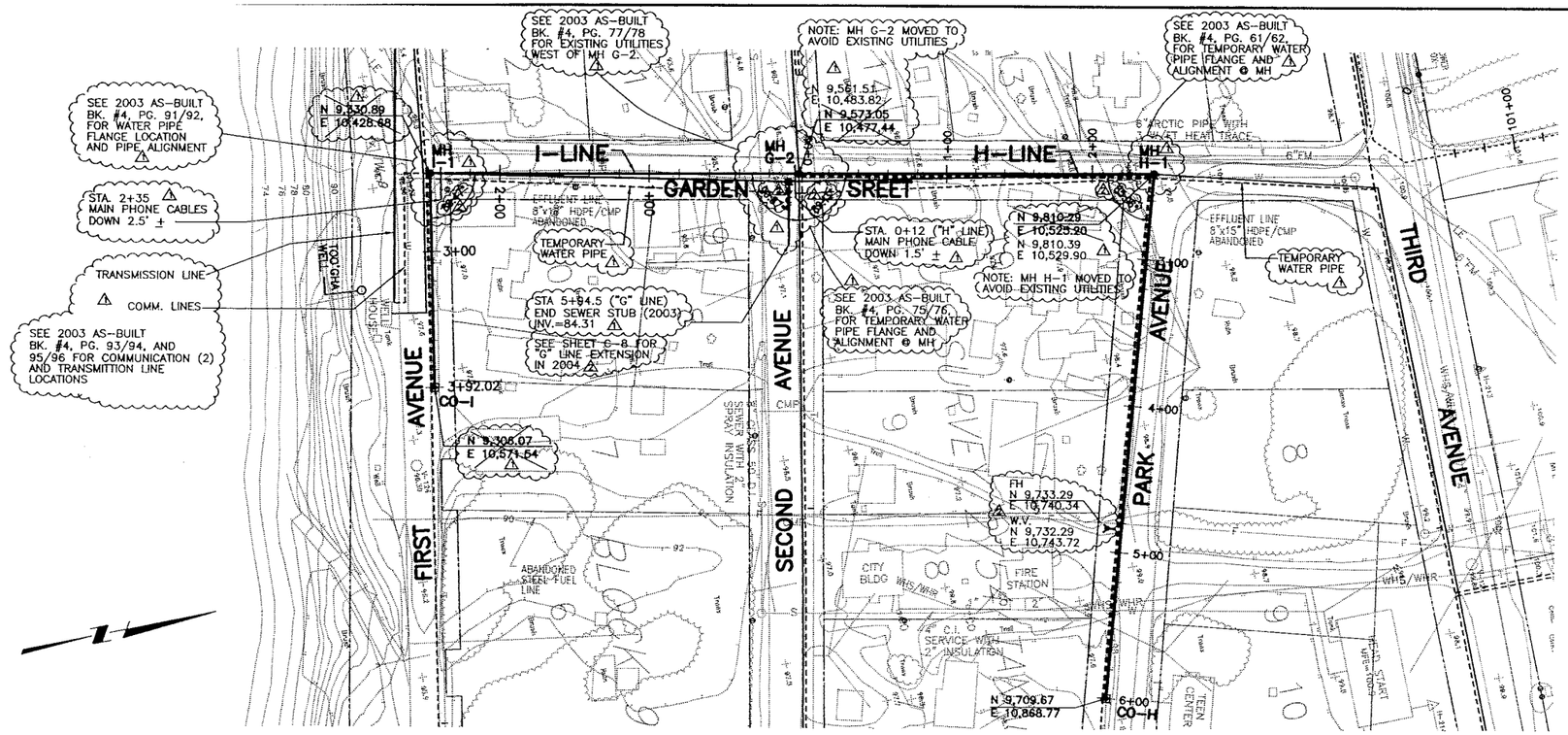

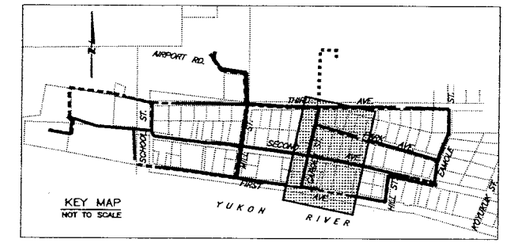

NOTES:
1. FIELD NOTES SHOULD BE RESEARCHED ALONG WITH THE PLAN INFORMATION, IN ANY FUTURE DIGGING, OR DESIGNING.
2. TEXT ONLY WAS CHANGED. DESIGN WAS NOT CHANGED. △1

CAUTION !!
CALL BEFORE YOU DIG
BEWARE OF BURIED AND OVERHEAD UTILITIES. CONTACT THE COMPANIES LISTED ON G-1 PRIOR TO COMMENCEMENT OF EXCAVATION.

HORIZONTAL SCALE IN FEET
50 0 50

VERTICAL SCALE IN FEET
5 0 5

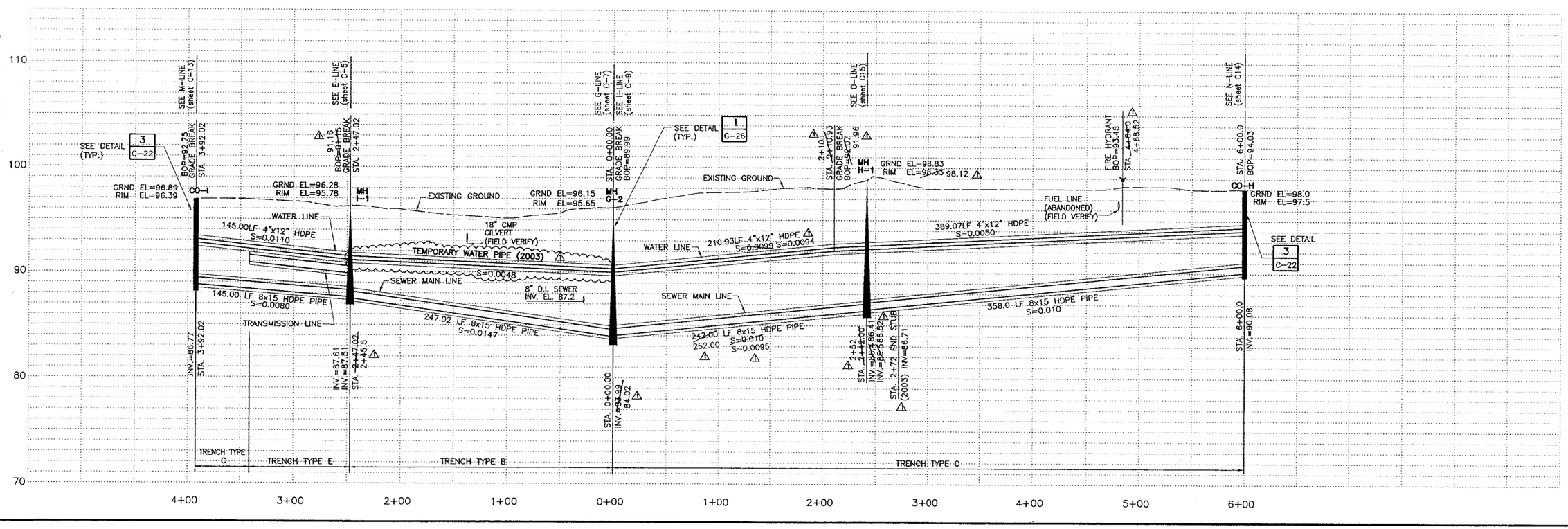

RECORD DRAWING CERTIFICATE
THESE DRAWINGS REFLECT RECORDED INFORMATION OBTAINED DURING CONSTRUCTION. INFORMATION PROVIDED HEREIN IS ACCURATE TO THE BEST OF MY KNOWLEDGE.
NAME Allyn E. Yakim 9/14/06 DATE

VILLAGE SAFE WATER

MONTGOMERY WATSON
Anchorage, Alaska
IN ASSOCIATION WITH
EDC, INC.

TOO'GHA INC. – TANANA, ALASKA
WATER DISTRIBUTION & WASTEWATER COLLECTION SYSTEM
H - LINE AND I - LINE SEWER AND WATER PLAN AND PROFILE

REVISION	BY	DATE
AGENCY REVIEW	MT	7/14/00
ISSUED FOR CONSTRUCTION	MT	5/2001
△1 RECORD DRAWING	MT	4/2005
△1 RECORD DRAWING	AY	5/2006

Project No. 1189078.010192
Date JULY 14, 2000
Designed MT
Drawn LF
Approved GM

Sheet No. C-9
SHEET ___ OF ___

JOB No.1189078.010102 TIME: 09-JUN-2006 10:38 FILE: C:\Proj\tanana\ws_lines\asbit-2006\C09.DGN

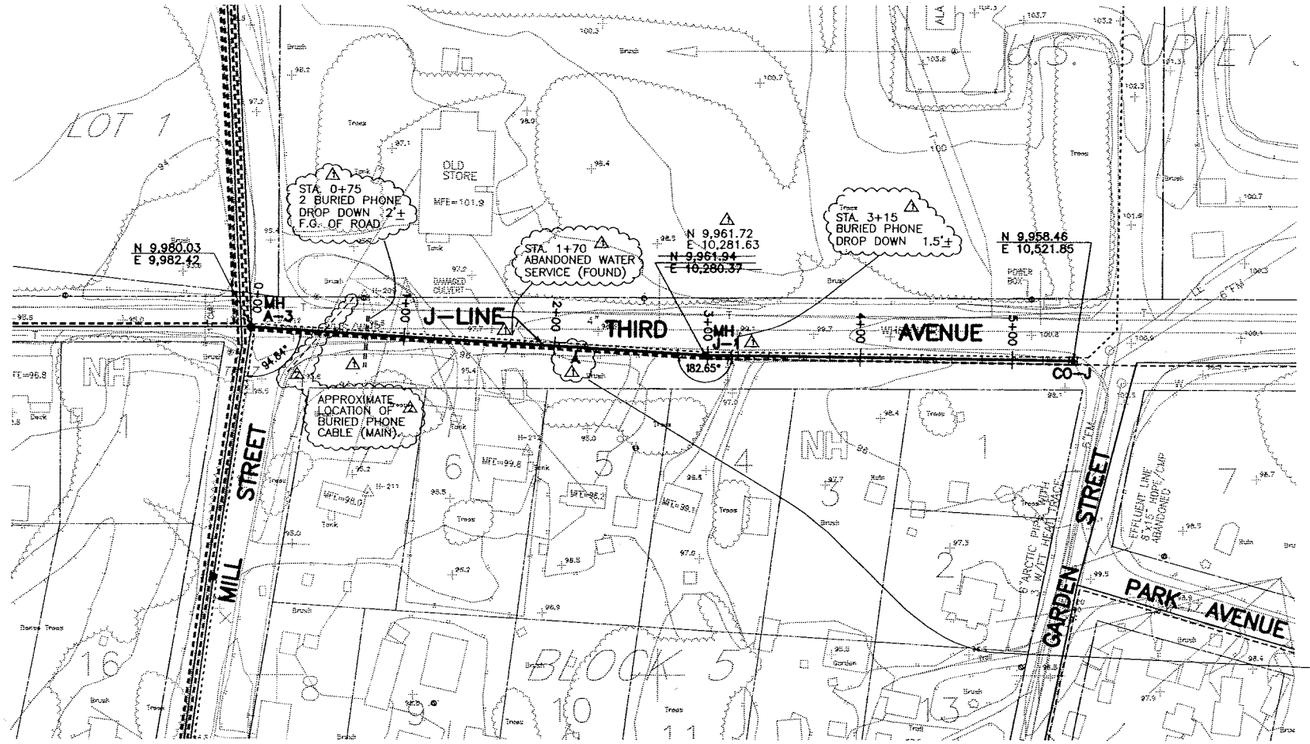

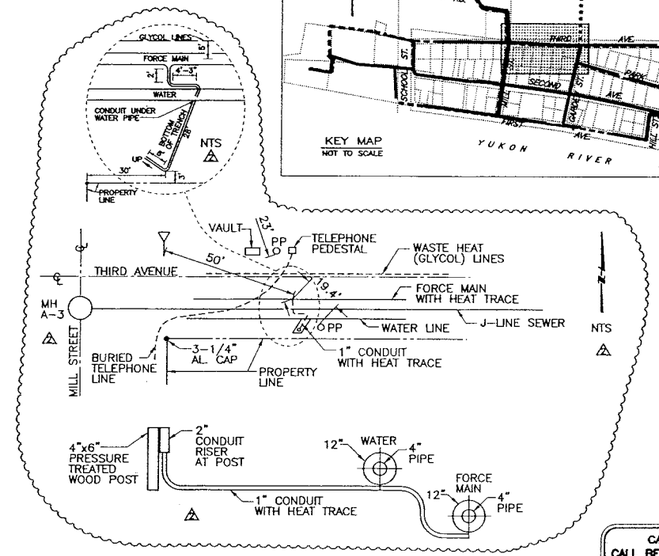

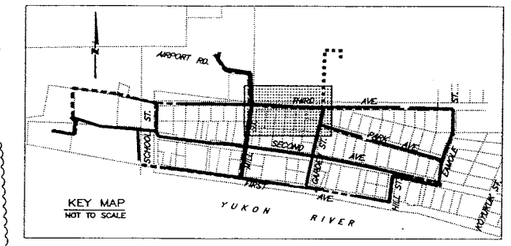

CAUTION !!
CALL BEFORE YOU DIG
BEWARE OF BURIED AND OVERHEAD UTILITIES. CONTACT THE COMPANIES LISTED ON G-1 PRIOR TO COMMENCEMENT OF EXCAVATION.

HORIZONTAL SCALE IN FEET
50 0 50

VERTICAL SCALE IN FEET
5 0 5

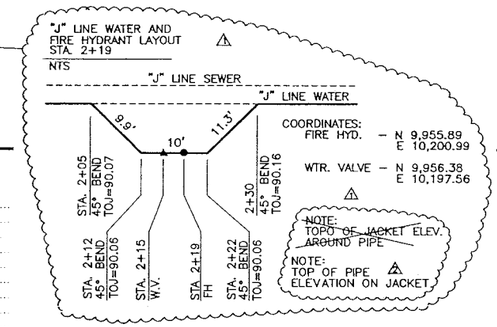

COORDINATES:
FIRE HYD. – N 9,955.89
E 10,200.99
WTR. VALVE – N 9,956.38
E 10,197.56

NOTE:
~~TOPO OF JACKET ELEV. AROUND PIPE~~

NOTE:
TOP OF PIPE ELEVATION ON JACKET

NOTES:
1. FIELD NOTES SHOULD BE RESEARCHED ALONG WITH THE PLAN INFORMATION, IN ANY FUTURE DIGGING, OR DESIGNING.
2. TEXT ONLY WAS CHANGED. DESIGN WAS NOT CHANGED.

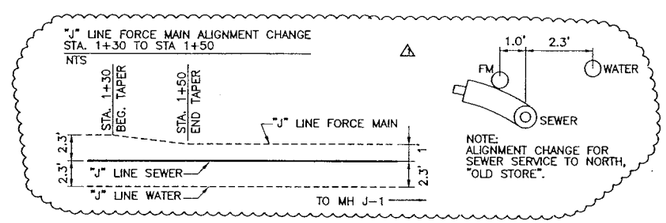

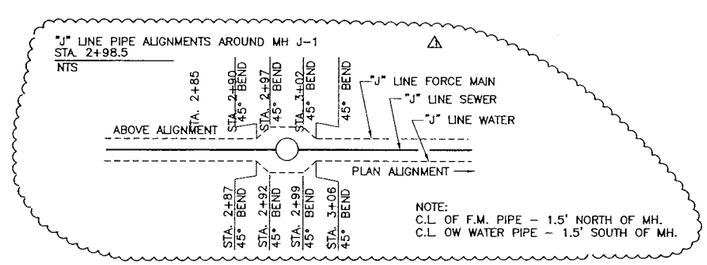

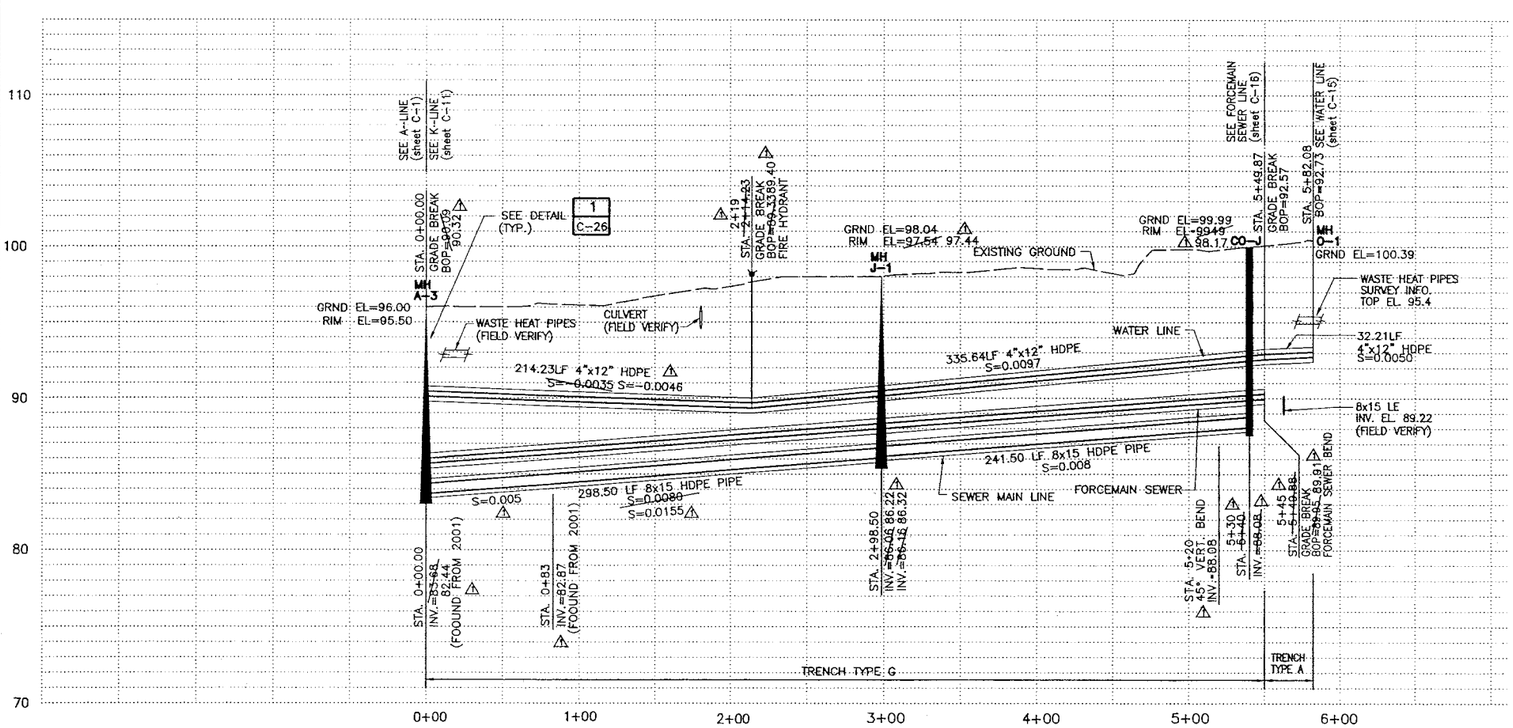

RECORD DRAWING CERTIFICATE
THESE DRAWINGS REFLECT RECORDED INFORMATION OBTAINED DURING CONSTRUCTION. INFORMATION PROVIDED HEREIN IS ACCURATE TO THE BEST OF MY KNOWLEDGE.
NAME Allyne Teakum DATE 6/16/05

STATE OF ALASKA 49TH ALLYNE TEAKUM No. CE 4342 REGISTERED PROFESSIONAL ENGINEER

VILLAGE SAFE WATER

STATE OF ALASKA 49TH MELINDA A. TAU CE-9866 REGISTERED PROFESSIONAL ENGINEER

MONTGOMERY WATSON
Anchorage, Alaska
IN ASSOCIATION WITH
EDC, INC.
ENGINEERING DESIGN CONSULTANTS, LTD.

TOO'GHA INC. – TANANA, ALASKA
WATER DISTRIBUTION &
WASTEWATER COLLECTION SYSTEM
J – LINE SEWER AND WATER
PLAN AND PROFILE

REVISION	BY	DATE
AGENCY REVIEW	MT	7/14/00
ISSUED FOR CONSTRUCTION	MT	5/2001
△1 RECORD DRAWING	MT	4/2005
△2 RECORD DRAWING	AY	5/2006

Project No. 1189078.010102
Date JULY 14, 2000
Designed MT
Drawn LF
Approved GM

Sheet No. C-10
SHEET ___ OF ___

FILE: C:\Proj\tanana\ws_lines\asbit-2006\C10.DGN
JOB No.1189078.010102 TIME: 09-JUN-2006 10:39

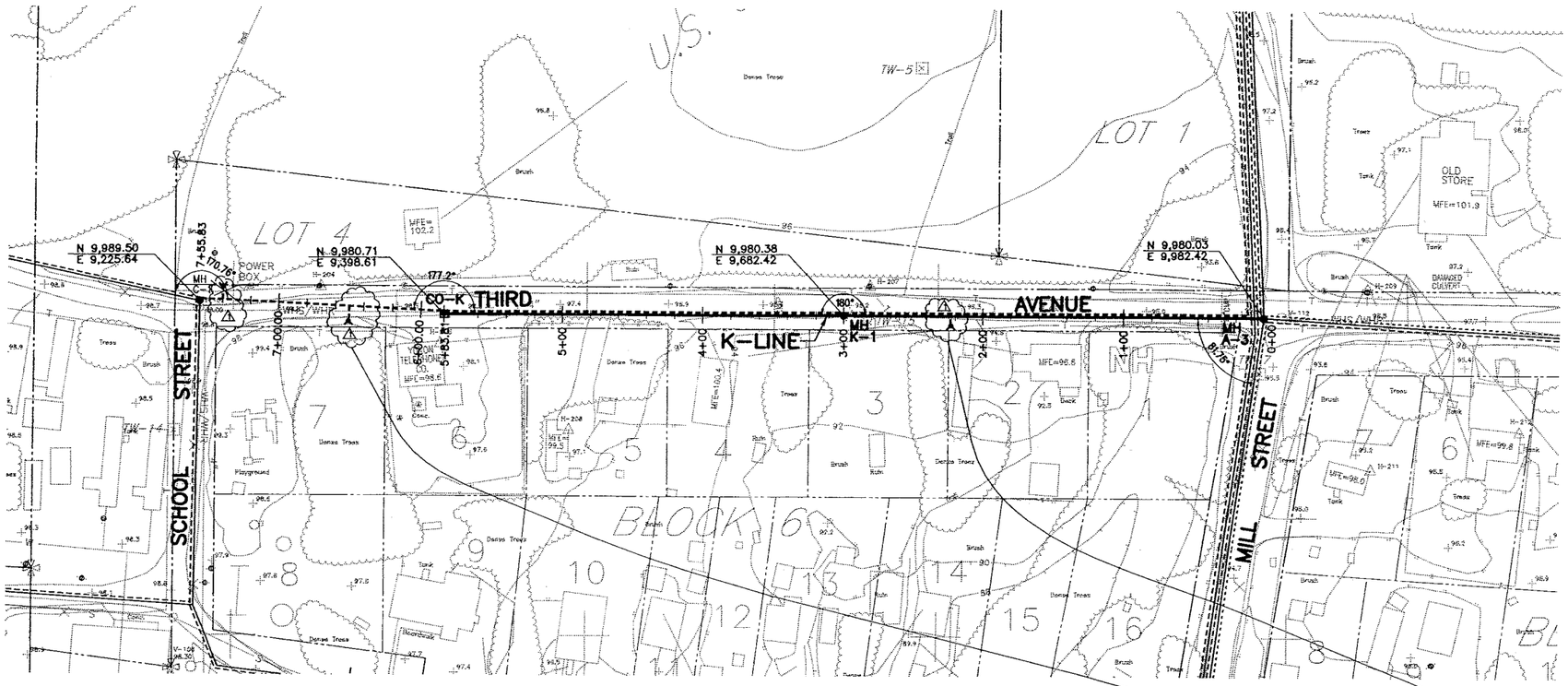

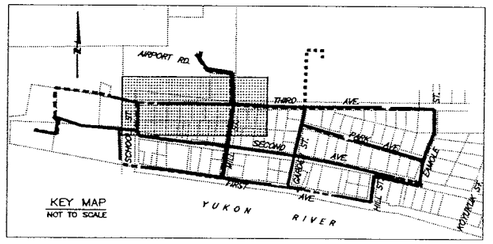

NOTES:
1. FIELD NOTES SHOULD BE RESEARCHED ALONG WITH THE PLAN INFORMATION, IN ANY FUTURE DIGGING, OR DESIGNING.
2. TEXT ONLY WAS CHANGED. DESIGN WAS NOT CHANGED. △1

CAUTION !!
CALL BEFORE YOU DIG
BEWARE OF BURIED AND OVERHEAD UTILITIES. CONTACT THE COMPANIES LISTED ON C-1 PRIOR TO COMMENCEMENT OF EXCAVATION.

HORIZONTAL SCALE IN FEET
50 0 50

VERTICAL SCALE IN FEET
5 0 5

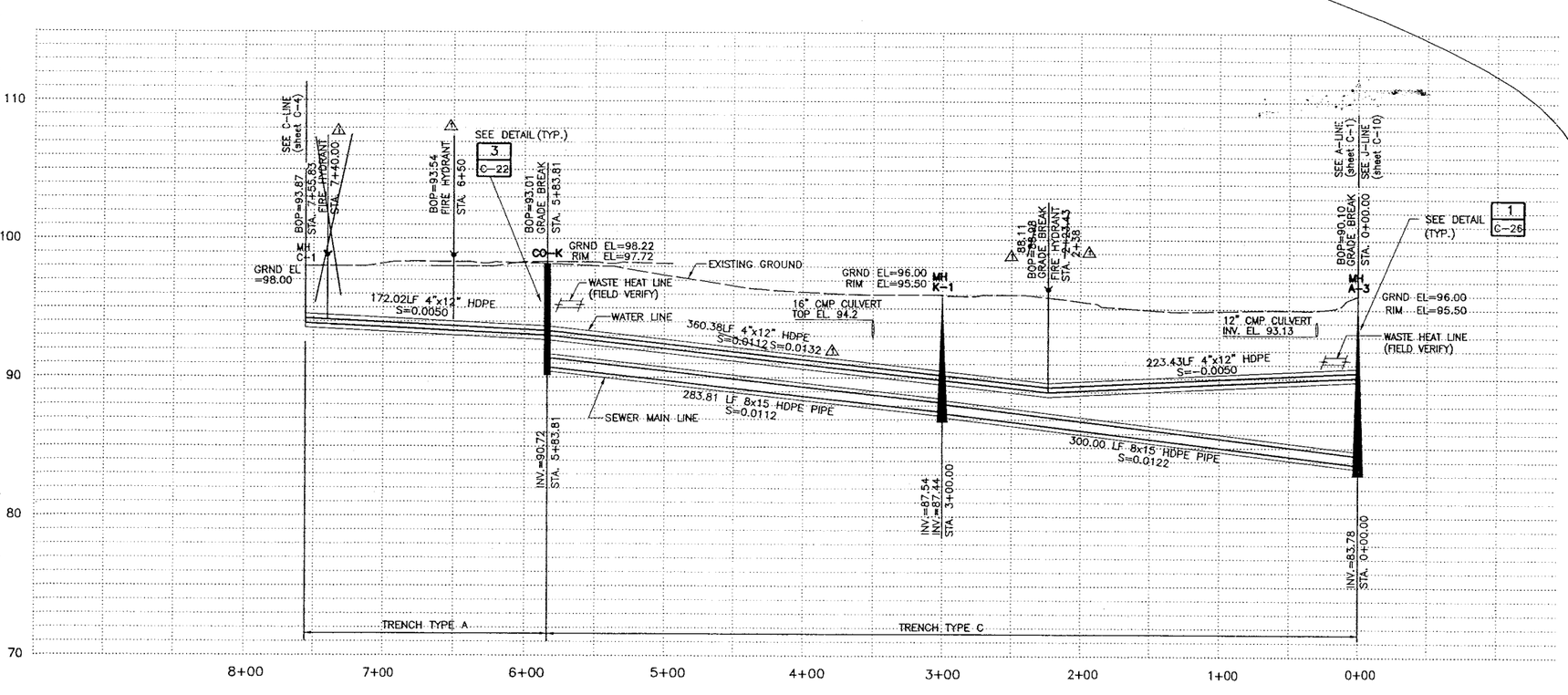

"K" LINE WATER PIPE
FIRE HYDRANT ASSEMBLY
STA. 2+38
NTS △1

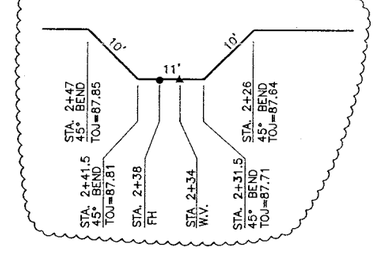

"K" LINE WATER PIPE
FIRE HYDRANT ASSEMBLY
STA. 6+50 (MOVED LOCATION)
NTS △1

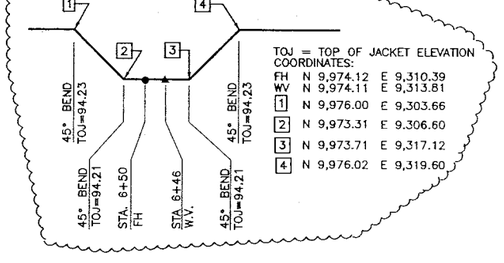

TOJ = TOP OF JACKET ELEVATION
COORDINATES:

FH	N 9,974.12	E 9,310.39
WV	N 9,974.11	E 9,313.81
1	N 9,976.00	E 9,303.66
2	N 9,973.31	E 9,306.60
3	N 9,973.71	E 9,317.12
4	N 9,976.02	E 9,319.60

RECORD DRAWING CERTIFICATE
THESE DRAWINGS REFLECT RECORDED INFORMATION OBTAINED DURING CONSTRUCTION. INFORMATION PROVIDED HEREIN IS ACCURATE TO THE BEST OF MY KNOWLEDGE.
Allyn E Yoakum 4/4/06
NAME DATE

STATE OF ALASKA 49TH ALLYN E. YOAKUM No. CE-9608 REGISTERED PROFESSIONAL ENGINEER

VILLAGE SAFE WATER

STATE OF ALASKA 49TH MICHAEL A. TSU No. CE-9608 REGISTERED PROFESSIONAL ENGINEER

MONTGOMERY WATSON
Anchorage, Alaska
IN ASSOCIATION WITH
EDC, INC.
Engineers, Planners, Architects

TOO'GHA INC. - TANANA, ALASKA
WATER DISTRIBUTION & WASTEWATER COLLECTION SYSTEM

K - LINE SEWER AND WATER PLAN AND PROFILE

REVISION	BY	DATE
AGENCY REVIEW	MT	7/14/00
ISSUED FOR CONSTRUCTION	MT	5/2001
△1 RECORD DRAWING	MT	4/2005
△1 RECORD DRAWING	AY	5/2006

Project No. 1189078.010102
Date JULY 14, 2000
Designed MT
Drawn LF
Approved GM

Sheet No. C-11
SHEET OF

JOB No.1189078.010102 TIME: 09-JUN-2006 10:39 FILE: C:\Proj\tanana\ws_lines\cabit-2006\C11.DGN

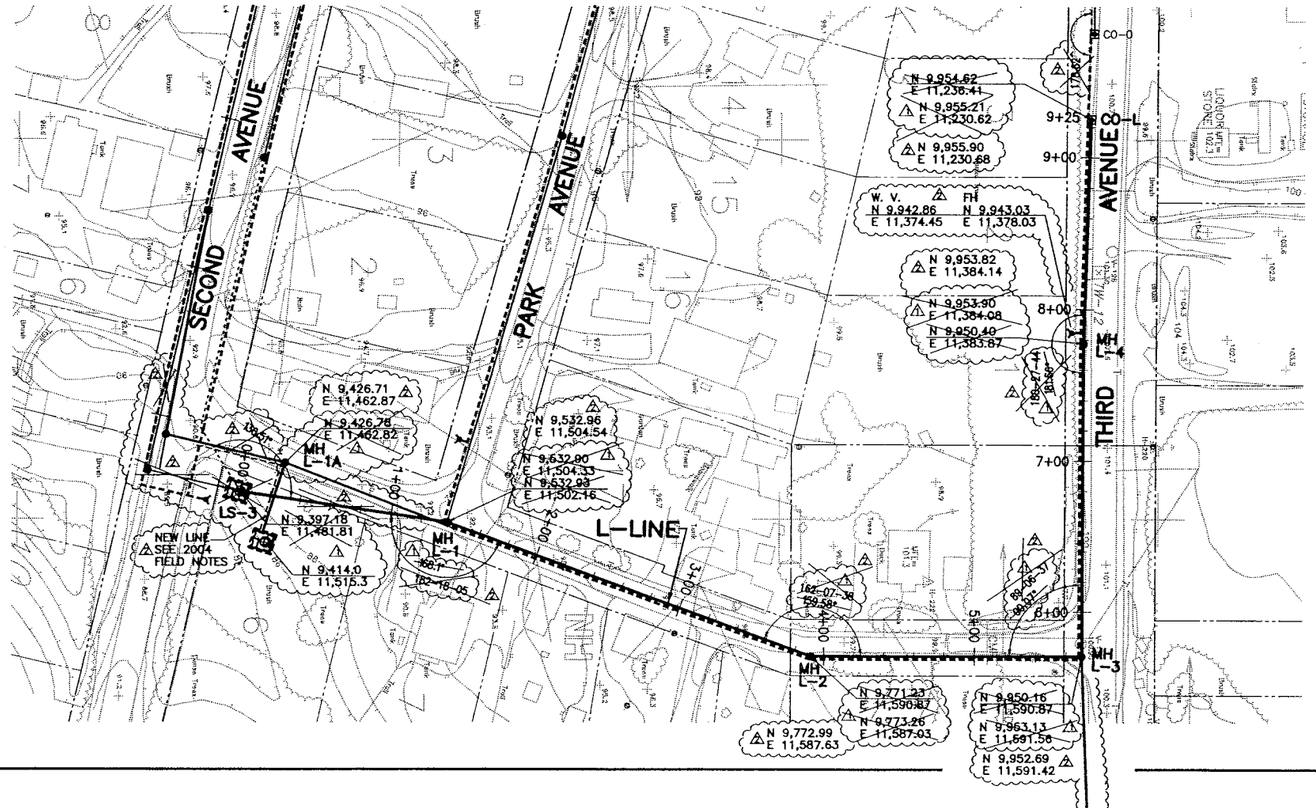

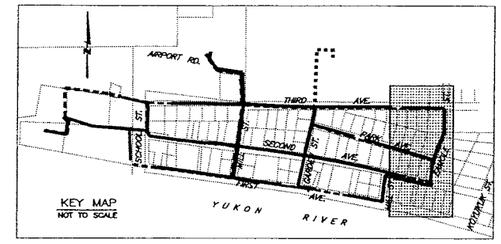

NOTES:
1. FIELD NOTES SHOULD BE RESEARCHED ALONG WITH THE PLAN INFORMATION, IN ANY FUTURE DIGGING, OR DESIGNING.
2. TEXT ONLY WAS CHANGED. DESIGN WAS NOT CHANGED. △

CAUTION !!
CALL BEFORE YOU DIG
BEWARE OF BURIED AND OVERHEAD UTILITIES. CONTACT THE COMPANIES LISTED ON G-1 PRIOR TO COMMENCEMENT OF EXCAVATION.

HORIZONTAL SCALE IN FEET
50 0 50

VERTICAL SCALE IN FEET
5 0 5

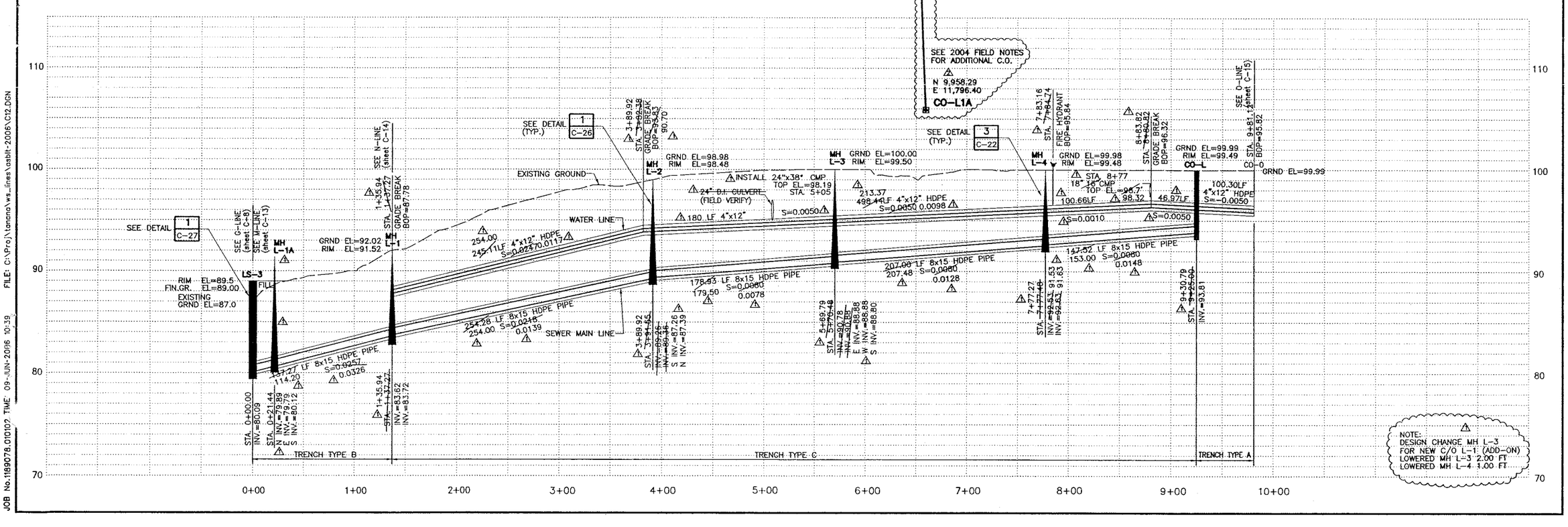

NOTE:
DESIGN CHANGE MH L-3 FOR NEW C/O L-1 (ADD-ON)
LOWERED MH L-3 2.00 FT
LOWERED MH L-4 1.00 FT

RECORD DRAWING CERTIFICATE
THESE DRAWINGS REFLECT RECORDED INFORMATION OBTAINED DURING CONSTRUCTION. INFORMATION PROVIDED HEREIN IS ACCURATE TO THE BEST OF MY KNOWLEDGE.
NAME Arlyn E. Yoder DATE 4/14/04

STATE OF ALASKA 49TH ARLYN E. YOUKON REGISTERED PROFESSIONAL ENGINEER No. CE-9606

VILLAGE SAFE WATER

STATE OF ALASKA 49TH MELINDA A. TEO REGISTERED PROFESSIONAL ENGINEER No. CE-9605

MONTGOMERY WATSON
Anchorage, Alaska
IN ASSOCIATION WITH
EDC, INC.
ENGINEERS, PLANNERS, ARCHITECTS

TOO'GHA INC. - TANANA, ALASKA
WATER DISTRIBUTION & WASTEWATER COLLECTION SYSTEM

L - LINE SEWER AND WATER PLAN AND PROFILE

REVISION	BY	DATE
AGENCY REVIEW	MT	7/14/00
ISSUED FOR CONSTRUCTION	MT	5/2001
△ RECORD DRAWING	MT	4/2005
△ RECORD DRAWING	AY	5/2006

Project No. 1189078.010/092
Date JULY 14, 2000
Designed MT
Drawn LF
Approved GM

Sheet No. C-12
SHEET ___ OF ___

JOB No.1189078.010/092 TIME: 09-JUN-2006 10:39 FILE: C:\Proj\tanana\wa_lines\asbit-2006\C12.DGN

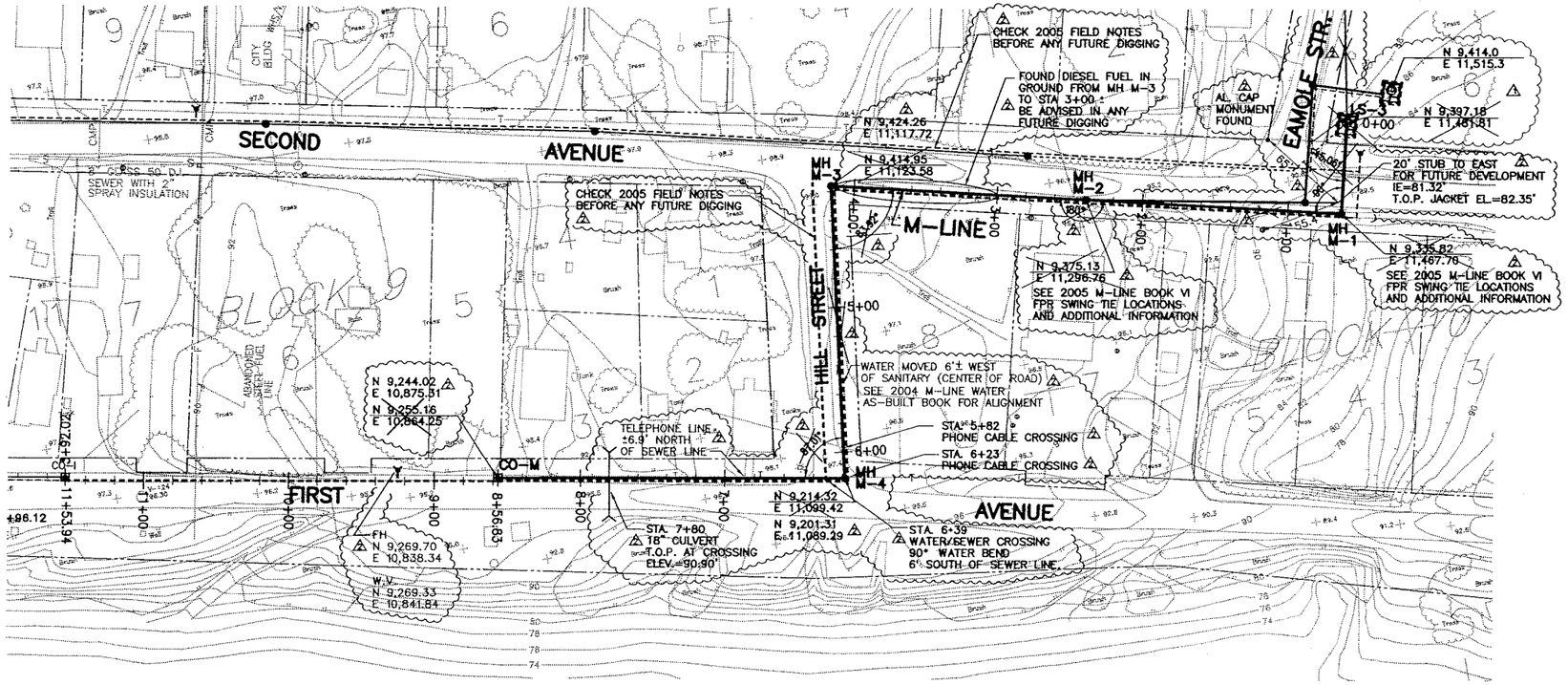

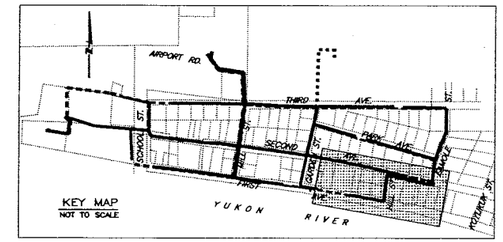

NOTES:
1. FIELD NOTES SHOULD BE RESEARCHED ALONG WITH THE PLAN INFORMATION, IN ANY FUTURE DIGGING, OR DESIGNING.
2. TEXT ONLY WAS CHANGED. DESIGN WAS NOT CHANGED. △

CAUTION !!
CALL BEFORE YOU DIG
BEWARE OF BURIED AND OVERHEAD UTILITIES. CONTACT THE COMPANIES LISTED ON G-1 PRIOR TO COMMENCEMENT OF EXCAVATION.

HORIZONTAL SCALE IN FEET
50 0 50

VERTICAL SCALE IN FEET
5 0 5

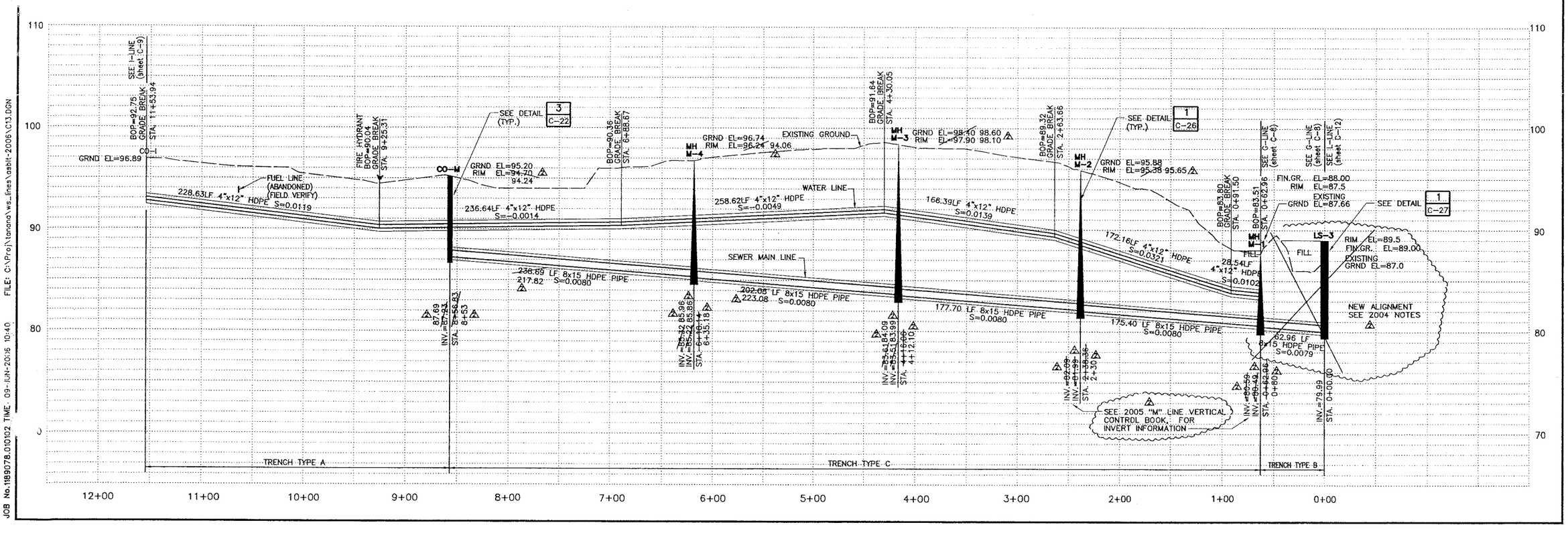

RECORD DRAWING CERTIFICATE
THESE DRAWINGS REFLECT RECORDED INFORMATION OBTAINED DURING CONSTRUCTION. INFORMATION PROVIDED HEREIN IS ACCURATE TO THE BEST OF MY KNOWLEDGE.
Allyn E Yoder 6/16/06
NAME DATE

STATE OF ALASKA 49TH ALLYN E. YODER No. CE-9342 REGISTERED PROFESSIONAL ENGINEER

VILLAGE SAFE WATER

STATE OF ALASKA 49TH MELINDA A. TSU CE-9608 REGISTERED PROFESSIONAL ENGINEER

MONTGOMERY WATSON
Anchorage, Alaska
IN ASSOCIATION WITH
EDC, INC.
215 W. Fireweed Ln.
Anchorage, AK 99503

TOO'GHA INC. – TANANA, ALASKA
WATER DISTRIBUTION & WASTEWATER COLLECTION SYSTEM

M - LINE SEWER AND WATER PLAN AND PROFILE

REVISION	BY	DATE
AGENCY REVIEW	MT	7/14/00
ISSUED FOR CONSTRUCTION	MT	5/2001
△1 RECORD DRAWING	MT	4/2005
△2 RECORD DRAWING	AY	5/2006

Project No. 1189078.010102
Date JULY 14, 2000
Designed MT
Drawn LF
Approved GM

Sheet No. C-13
SHEET ___ OF ___

FILE: C:\Proj\tanana\ws_lines\cabit-2006\C13.DGN
JOB No.1189078.010102 TIME: 09-JUN-2016 10:40

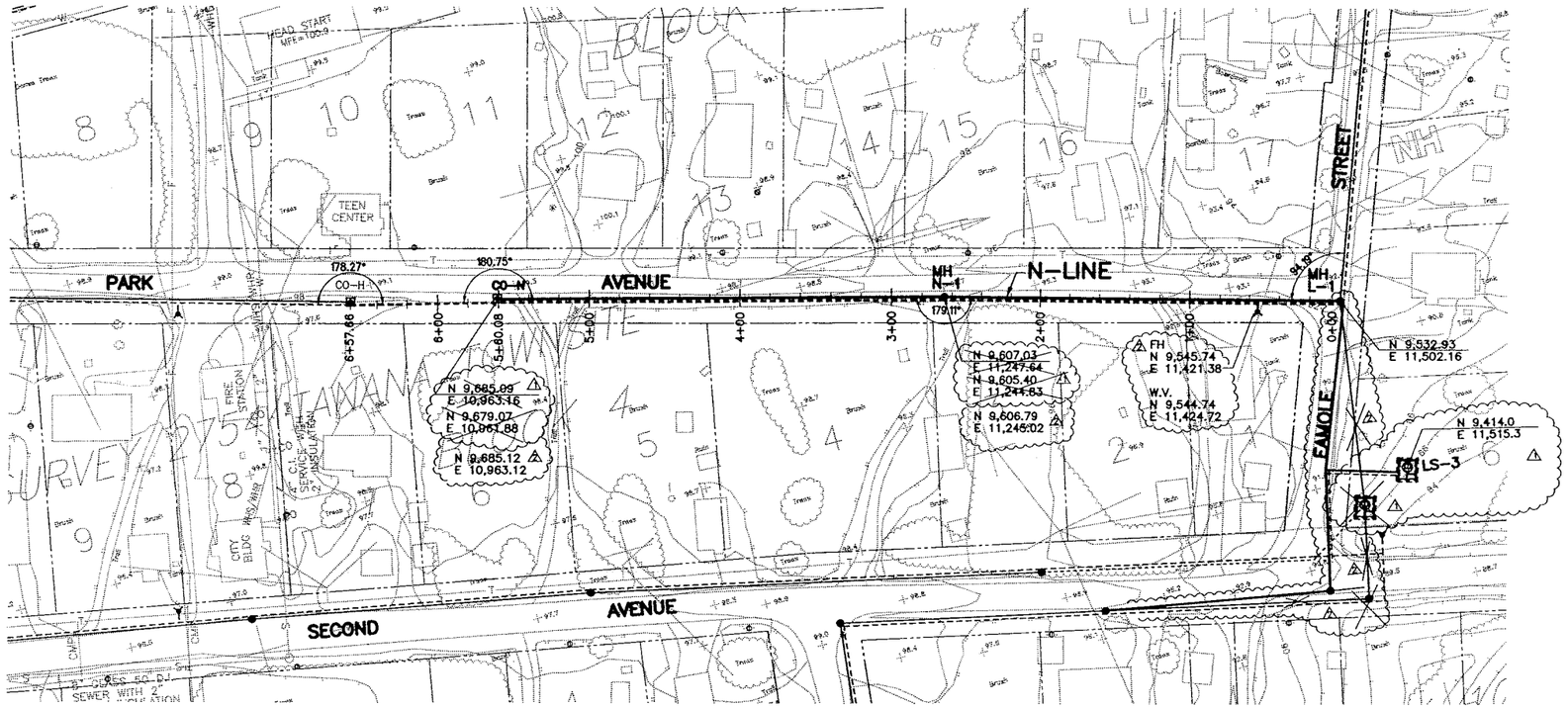

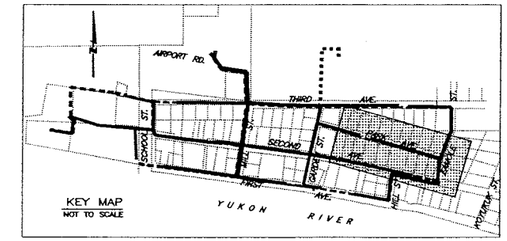

NOTES:
1. FIELD NOTES SHOULD BE RESEARCHED ALONG WITH THE PLAN INFORMATION, IN ANY FUTURE DIGGING, OR DESIGNING.
2. TEXT ONLY WAS CHANGED. DESIGN WAS NOT CHANGED. △

CAUTION !!
CALL BEFORE YOU DIG
BEWARE OF BURIED AND OVERHEAD UTILITIES. CONTACT THE COMPANIES LISTED ON G-1 PRIOR TO COMMENCEMENT OF EXCAVATION.

HORIZONTAL SCALE IN FEET
50 0 50

VERTICAL SCALE IN FEET
5 0 5

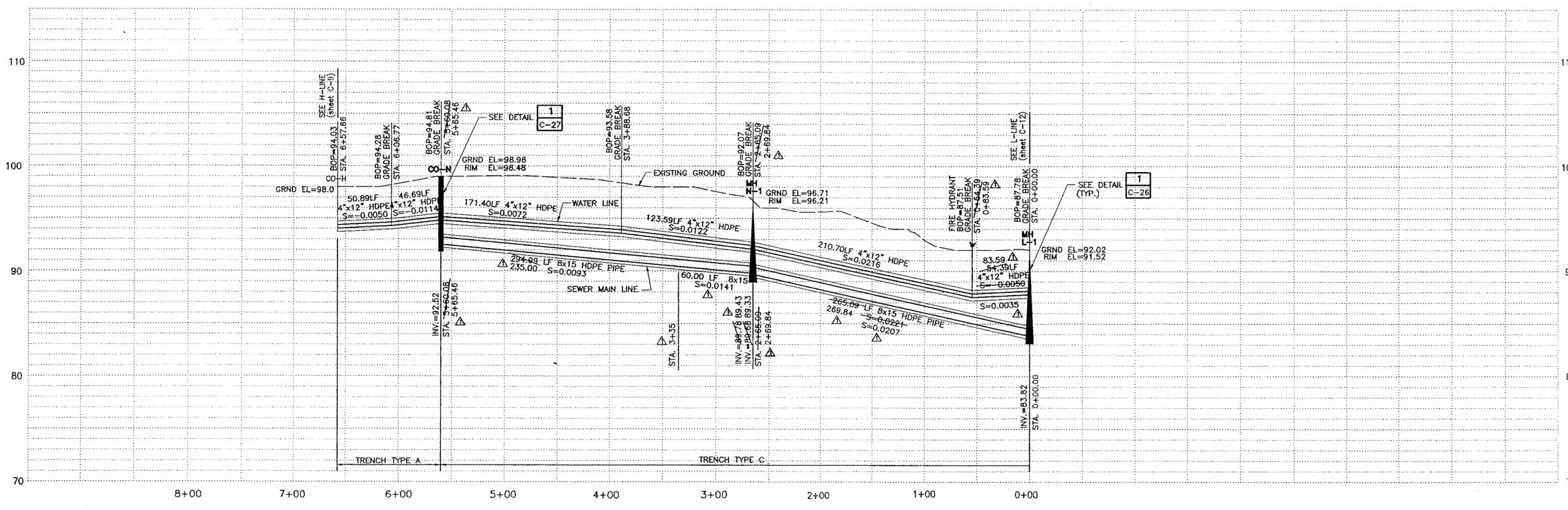

RECORD DRAWING CERTIFICATE
THESE DRAWINGS REFLECT RECORDED INFORMATION OBTAINED DURING CONSTRUCTION. INFORMATION PROVIDED HEREIN IS ACCURATE TO THE BEST OF MY KNOWLEDGE.
NAME Allyn E. Jackson DATE 6/16/06

STATE OF ALASKA 49TH REGISTERED PROFESSIONAL ENGINEER ALLYN E. JACKSON No. CE-9806

VILLAGE SAFE WATER

MONTGOMERY WATSON
Anchorage, Alaska
IN ASSOCIATION WITH
EDC, INC.
Anchorage, Alaska

TOO'GHA INC. - TANANA, ALASKA
WATER DISTRIBUTION & WASTEWATER COLLECTION SYSTEM

N - LINE WATER AND SEWER PLAN AND PROFILE

REVISION	BY	DATE
AGENCY REVIEW	MT	7/14/00
ISSUED FOR CONSTRUCTION	MT	5/2001
△ RECORD DRAWING	MT	4/2005
△ RECORD DRAWING	AY	5/2006

Project No. 1189078.010102
Date JULY 14, 2000
Designed MT
Drawn LF
Approved GM

Sheet No. C-14
SHEET ___ OF ___

JOB No.1189078.010102 TIME: 09-JUN-2006 10:40 FILE: C:\Proj\tanana\wa_lines\sblt-2006\C14.DGN

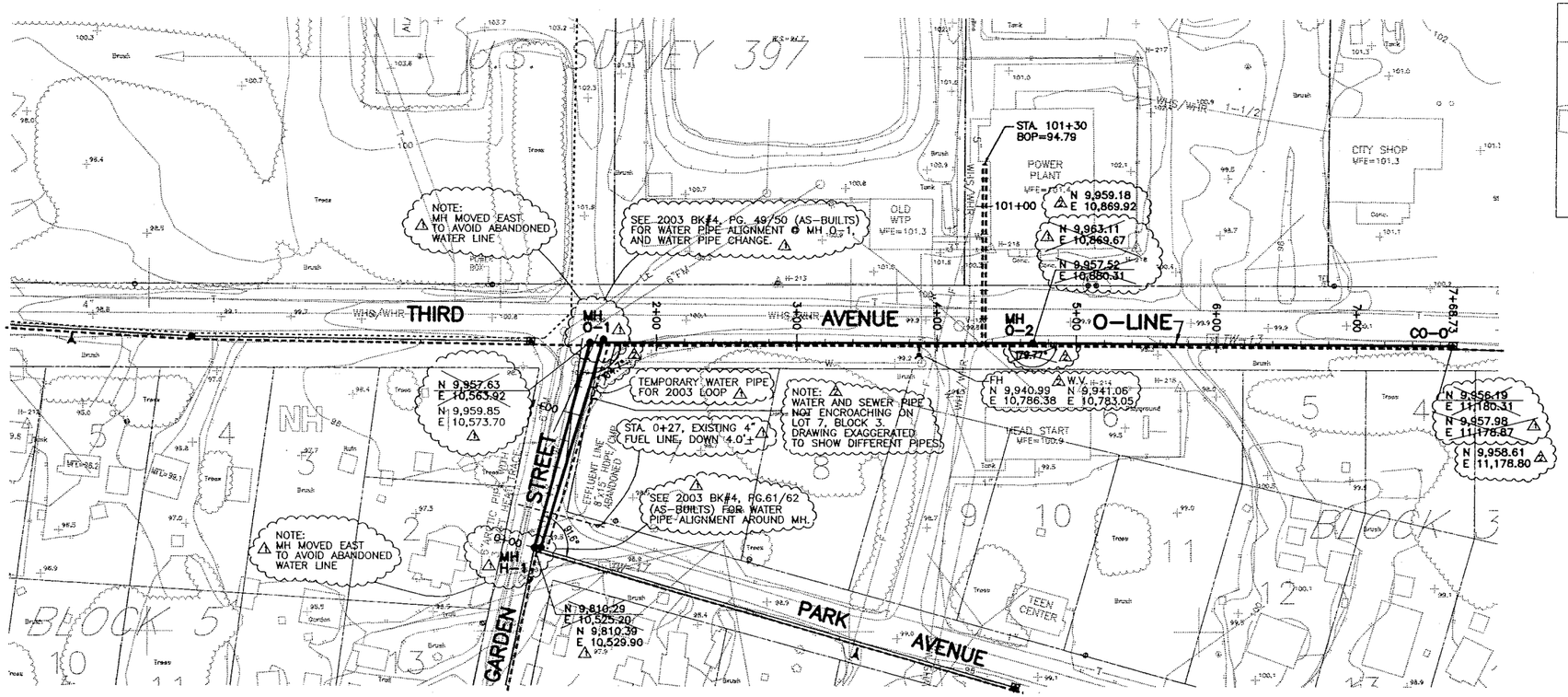

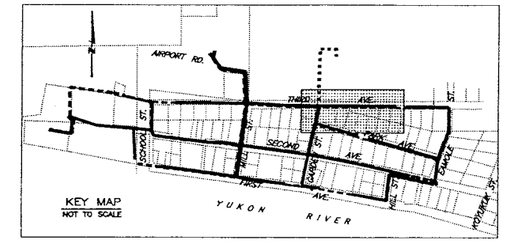

NOTES:
1. FIELD NOTES SHOULD BE RESEARCHED ALONG WITH THE PLAN INFORMATION, IN ANY FUTURE DIGGING, OR DESIGNING.
2. TEXT ONLY WAS CHANGED. DESIGN WAS NOT CHANGED. △

CAUTION !!
CALL BEFORE YOU DIG

BEWARE OF BURIED AND OVERHEAD UTILITIES. CONTACT THE COMPANIES LISTED ON G-1 PRIOR TO COMMENCEMENT OF EXCAVATION.

HORIZONTAL SCALE IN FEET
50 0 50

VERTICAL SCALE IN FEET
5 0 5

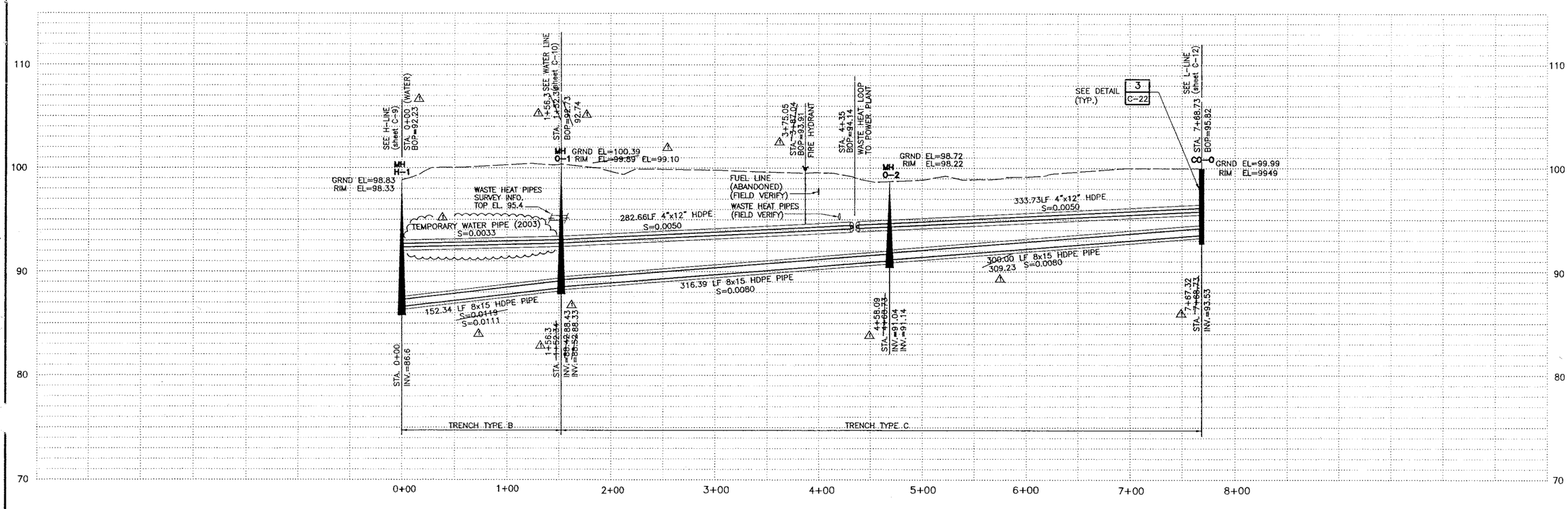

RECORD DRAWING CERTIFICATE
THESE DRAWINGS REFLECT RECORDED INFORMATION OBTAINED DURING CONSTRUCTION. INFORMATION PROVIDED HEREIN IS ACCURATE TO THE BEST OF MY KNOWLEDGE.
NAME Allyne E Gaskin DATE 5/16/06

STATE OF ALASKA ALLYNE E. GASKIN No. 4342 REGISTERED PROFESSIONAL ENGINEER

VILLAGE SAFE WATER

STATE OF ALASKA 4342 ALLYNE E. GASKIN REGISTERED PROFESSIONAL ENGINEER

MONTGOMERY WATSON
Anchorage, Alaska
IN ASSOCIATION WITH
EDC, INC.
ENGINEERING DESIGN CONSULTANTS

TOO'GHA INC. – TANANA, ALASKA
WATER DISTRIBUTION & WASTEWATER COLLECTION SYSTEM

O - LINE SEWER AND WATER PLAN AND PROFILE

REVISION	BY	DATE
AGENCY REVIEW	MT	7/14/00
ISSUED FOR CONSTRUCTION	MT	5/2001
△1 RECORD DRAWING	MT	4/2005
△2 RECORD DRAWING	AY	5/2006

Project No. 1189078.010102
Date JULY 14, 2000
Designed MT
Drawn LF
Approved GM

Sheet No. C-15
SHEET ___ OF ___

FILE: C:\Proj\tanana\ws_lines\asbit-2006\C15.DGN
JOB No.1189078.010102 TIME 09-JUN-2016 10:41

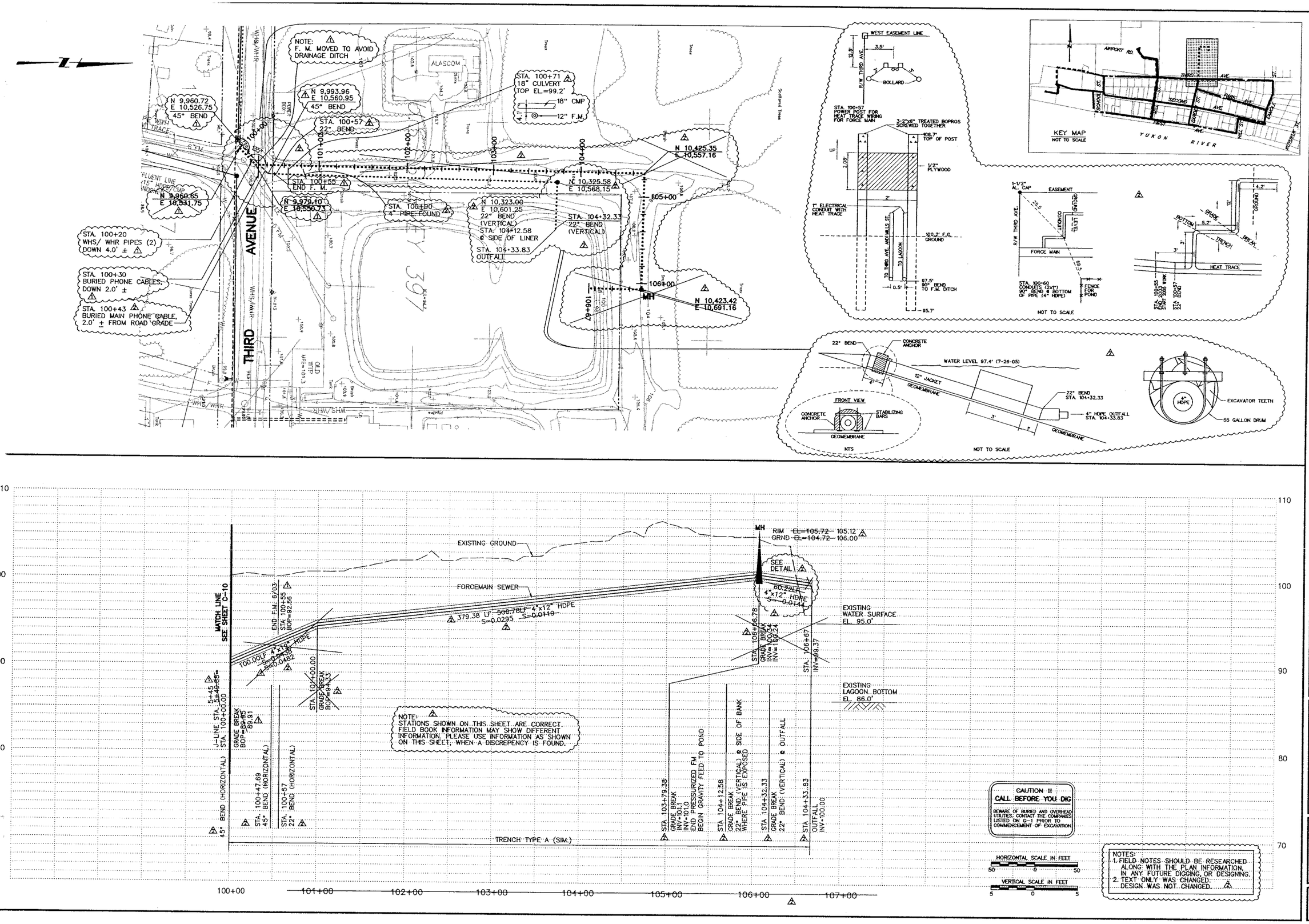

RECORD DRAWING CERTIFICATE
THESE DRAWINGS REFLECT RECORDED INFORMATION OBTAINED DURING CONSTRUCTION. INFORMATION PROVIDED HEREIN IS ACCURATE TO THE BEST OF MY KNOWLEDGE.
Allyn E. Yokum 6/14/06
NAME DATE

STATE OF ALASKA ALLYN E. YOKUM CE-9606 REGISTERED PROFESSIONAL ENGINEER

VILLAGE SAFE WATER

STATE OF ALASKA MELINDA A. TSU CE-9606 REGISTERED PROFESSIONAL ENGINEER

MONTGOMERY WATSON
Anchorage, Alaska
IN ASSOCIATION WITH
EDC, INC.
733 W. 4th Avenue, Ste.
Anchorage, AK 99501

TOO'GHA INC. - TANANA, ALASKA
WATER DISTRIBUTION & WASTEWATER COLLECTION SYSTEM
FORCEMAIN SEWER LINE (north end)
PLAN AND PROFILE

REVISION	BY	DATE
AGENCY REVIEW	MT	7/14/00
ISSUED FOR CONSTRUCTION	MT	5/2001
1 RECORD DRAWING	MT	4/2005
2 RECORD DRAWING	AY	5/2006

Project No. 1189078.010102
Date JULY 14, 2000
Designed MT
Drawn LF
Approved GM

Sheet No. C-16
SHEET OF

JOB No.1189078.010102 TIME: 16-JUN-2006 11:24 FILE: \\usanc1s01\server\Cad\Proj\tanana\ws_lines\gabit-2006\C16.DGN

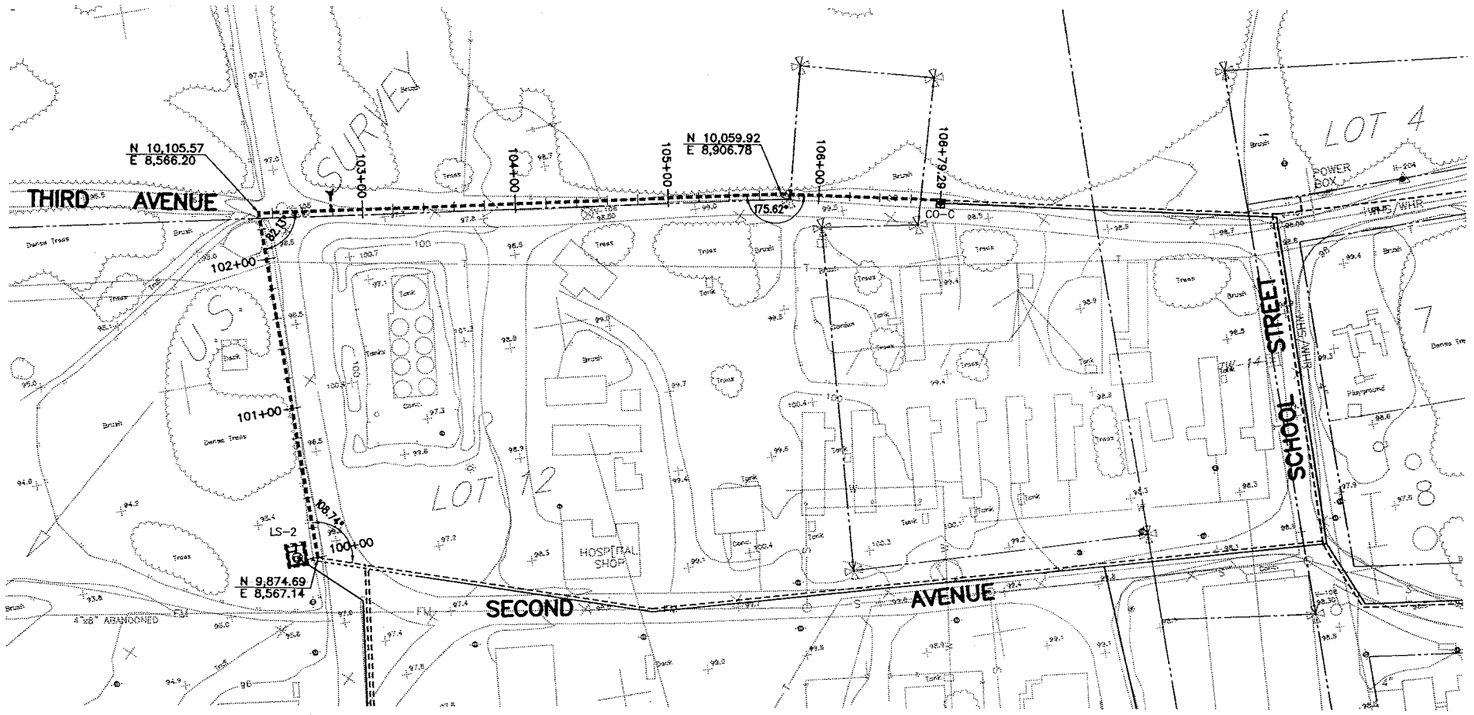

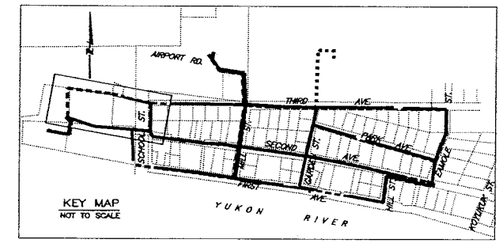

NOTES:
1. FIELD NOTES SHOULD BE RESEARCHED ALONG WITH THE PLAN INFORMATION, IN ANY FUTURE DIGGING, OR DESIGNING.
2. TEXT ONLY WAS CHANGED. DESIGN WAS NOT CHANGED. △3

CAUTION !!
CALL BEFORE YOU DIG
BEWARE OF BURIED AND OVERHEAD UTILITIES. CONTACT THE COMPANIES LISTED ON G-1 PRIOR TO COMMENCEMENT OF EXCAVATION.

HORIZONTAL SCALE IN FEET
50 0 50

VERTICAL SCALE IN FEET
5 0 5

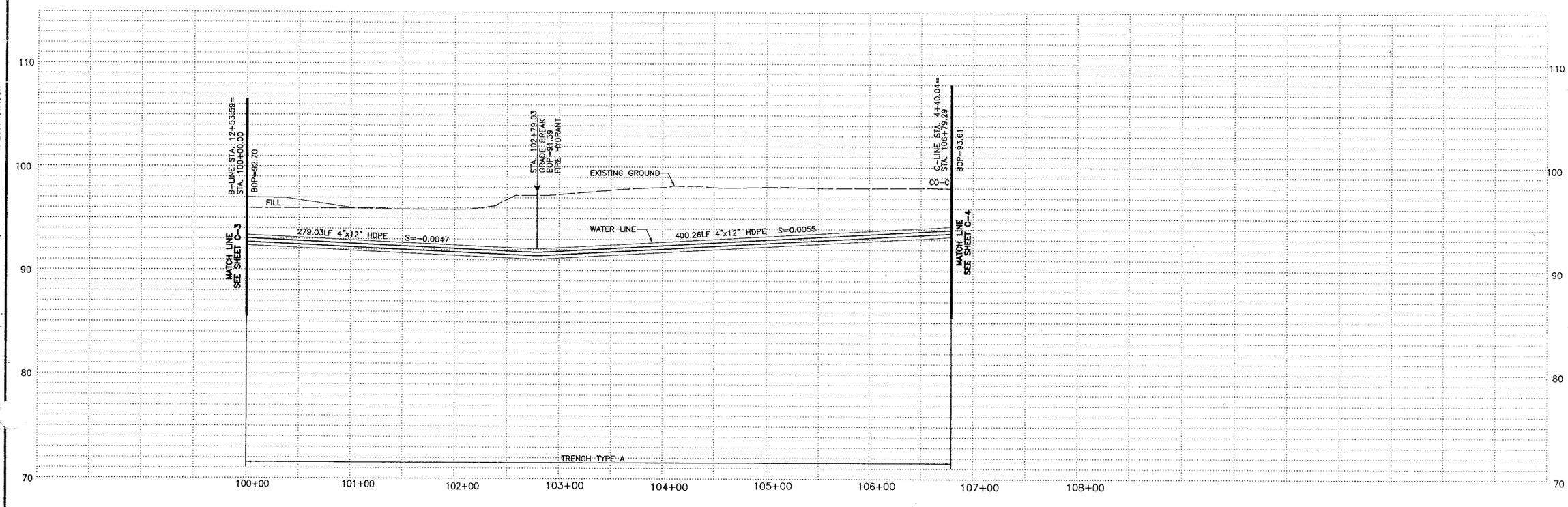

RECORD DRAWING CERTIFICATE
THESE DRAWINGS REFLECT RECORDED INFORMATION OBTAINED DURING CONSTRUCTION. INFORMATION PROVIDED HEREIN IS ACCURATE TO THE BEST OF MY KNOWLEDGE.
NAME Allyn E. Yoder DATE 5/2006
STATE OF ALASKA ALLYN E. YODER 4969 REGISTERED PROFESSIONAL ENGINEER

VILLAGE SAFE WATER

STATE OF ALASKA MELINDA A. TAU CE-9606 REGISTERED PROFESSIONAL ENGINEER

MONTGOMERY WATSON
Anchorage, Alaska
IN ASSOCIATION WITH
EDC, INC.
813 W. Fireweed Ln.
Anchorage, AK 99503

TOO'GHA INC. – TANANA, ALASKA
WATER DISTRIBUTION & WASTEWATER COLLECTION SYSTEM
WEST WATER LOOP
(between B-line and C-line)
PLAN AND PROFILE

REVISION	BY	DATE
AGENCY REVIEW	MT	7/14/00
ISSUED FOR CONSTRUCTION	MT	5/2001
△1 RECORD DRAWING	MT	4/2005
△2 RECORD DRAWING	AY	5/2006

Project No. 1189078.010102
Date JULY 14, 2000
Designed MT
Drawn LF
Approved GM

Sheet No. C-17
SHEET ___ OF ___

JOB No.1189078.010102 TIME: 09-JUN-2006 10:41 FILE: C:\Proj\tanana\ws_lines\gabit-2006\C17.DGN

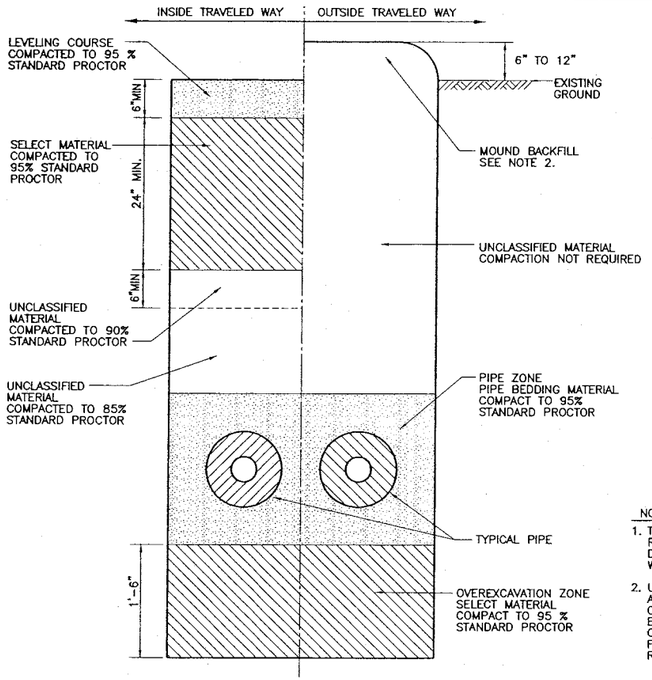

NOTES:

1. TRAVELED WAYS INCLUDE PARKING LOTS, ROAD SURFACES, TOE OF ROADWAYS, AND DRIVEWAYS. RECONSTUCT TRAVELED WAY WHERE DISTURBED BY TRENCH EXCAVATION.
2. UNCLASSIFIED MATERIAL MAY BE USED ABOVE THE PIPE ZONE FOR TRENCHES OUTSIDE OF THE TRAVELED WAY. MOUND EXCESS MATERIAL ABOVE TRENCH TO COMPENSATE EXPECTED SETTLEMENT. FUTURE GRADING OR FILLING MAY BE REQUIRED TO PRODUCE A LEVEL SURFACE.

INSIDE / OUTSIDE TRAVELED WAY TYPICAL TRENCH DETAIL — 1 / –

SCALE: 1" = 1'-0"

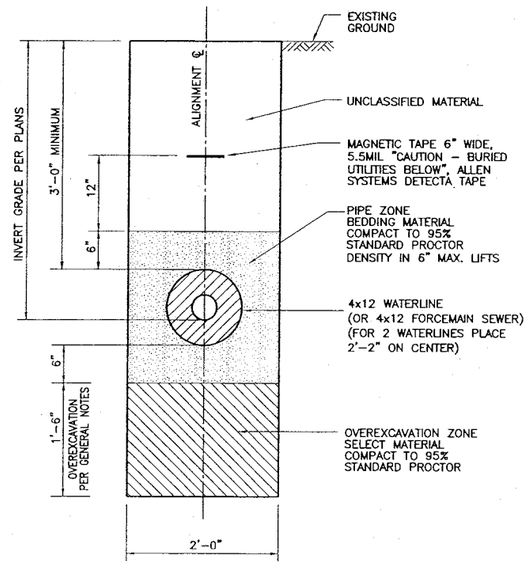

SINGLE WATERLINE TRENCH SECTION — A / –

SCALE: 1" = 1'-0"

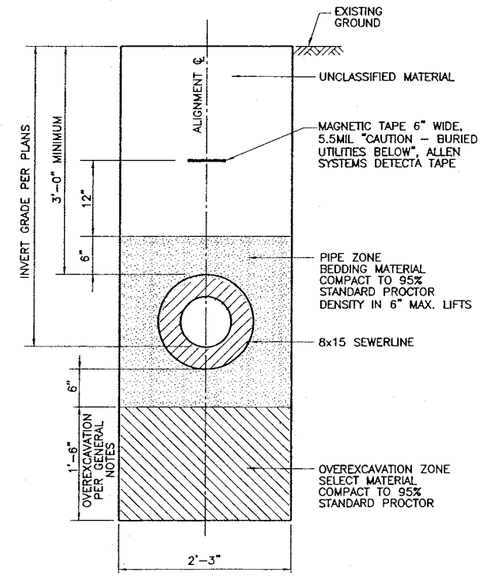

SEWER ONLY TRENCH SECTION — B / –

SCALE: 1" = 1'-0"

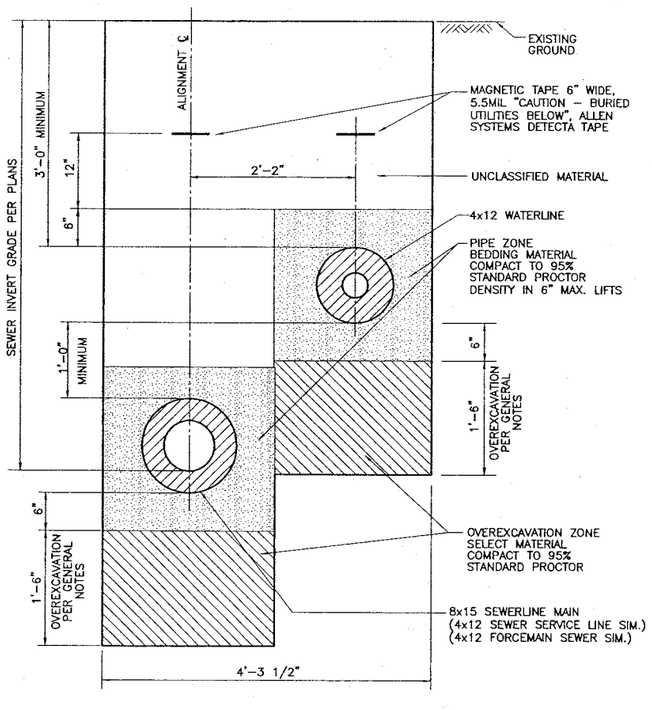

ONE SEWERLINE AND ONE WATERLINE TRENCH SECTION — C / –

SCALE: 1" = 1'-0"

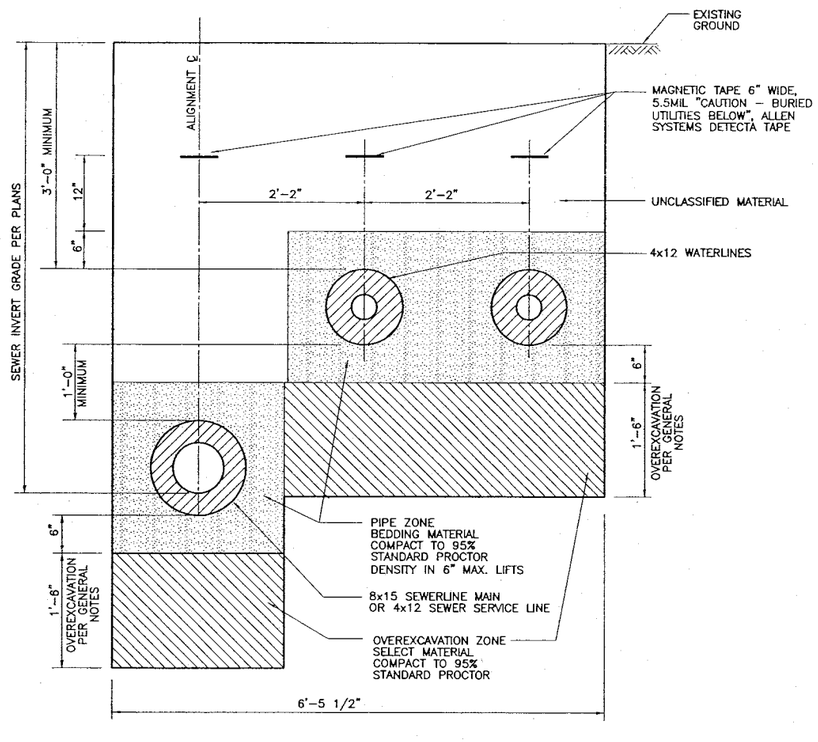

ONE SEWER LINE AND TWO WATERLINES TRENCH SECTION — D / –

SCALE: 1" = 1'-0"

NOTES:
1. FIELD NOTES SHOULD BE RESEARCHED ALONG WITH THE PLAN INFORMATION, IN ANY FUTURE DIGGING, OR DESIGNING.
2. TEXT ONLY WAS CHANGED. DESIGN WAS NOT CHANGED. △2

TRENCH SECTION SHEET NOTES

1. REFER TO DETAIL 1/C-18 FOR TRENCH CONSTRUCTION REQUIREMENTS INSIDE OR OUTSIDE OF TRAVELED WAY. THIS INFORMATION IS NOT SHOWN ON TRENCH SECTIONS "A" THROUGH "I" FOR CLARITY.
2. SEE GENERAL NOTES ON G-1 FOR TRENCH REQUIREMENTS AND PIPE TRENCH MATERIAL SPECIFICATIONS.
3. PLAN AND PROFILE REFERENCE ALIGNMENT IS BASED ON CENTER OF SEWER LINE ALIGNMENT AS INDICATED IN SECTION DETAILS.

RECORD DRAWING CERTIFICATE

THESE DRAWINGS REFLECT RECORDED INFORMATION OBTAINED DURING CONSTRUCTION. INFORMATION PROVIDED HEREIN IS ACCURATE TO THE BEST OF MY KNOWLEDGE.

NAME Allyn E. Boskin DATE 4/4/06

STATE OF ALASKA 49TH ALLYN E. BOSKIN No. CE 4041 REGISTERED PROFESSIONAL ENGINEER

VILLAGE SAFE WATER

STATE OF ALASKA 49TH MELINDA A. TRIP No. CE 8905 REGISTERED PROFESSIONAL ENGINEER

MONTGOMERY WATSON Anchorage, Alaska

IN ASSOCIATION WITH EDC, INC. ASE-ENGINEERING

TOO'GHA INC. – TANANA, ALASKA
WATER DISTRIBUTION & WASTEWATER COLLECTION SYSTEM

TRENCH SECTIONS

REVISION	BY	DATE
AGENCY REVIEW	MT	7/14/03
ISSUED FOR CONSTRUCTION	MT	5/2001
RECORD DRAWING	MT	4/2005
RECORD DRAWING	AY	5/2006

Project No. 1189078.010102
Date JULY 14, 2000
Designed MT
Drawn LF
Approved GM

Sheet No. C-18
SHEET ___ OF ___

JOB No. 1189078.010102 FILE: C:\Proj\tanana\ws_lines\asbit-2006\C18.DGN DATE: 09-JUN-2006 10:42:

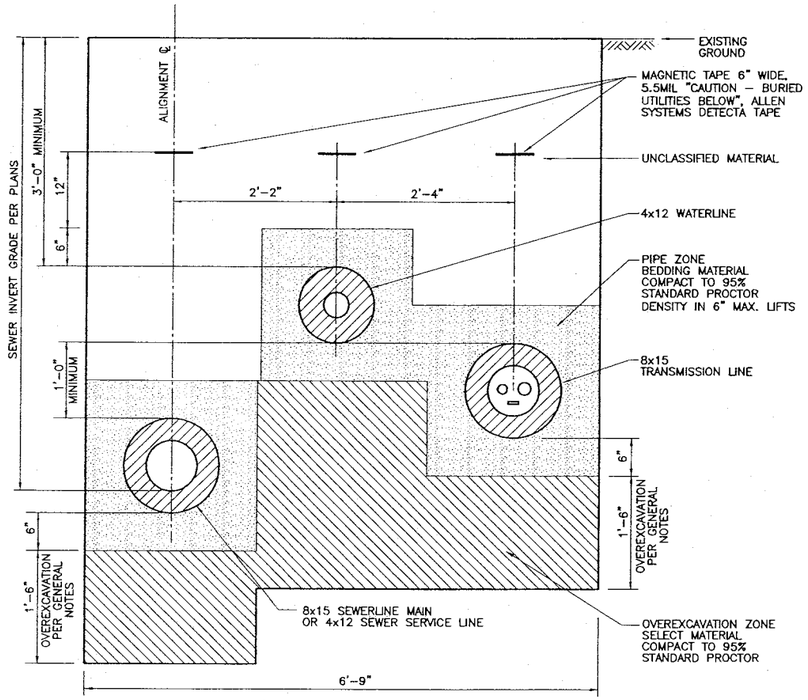

ONE SEWER LINE, ONE WATERLINE AND ONE TRANSMISSION LINE TRENCH SECTION — E

SCALE: 1" = 1'-0"

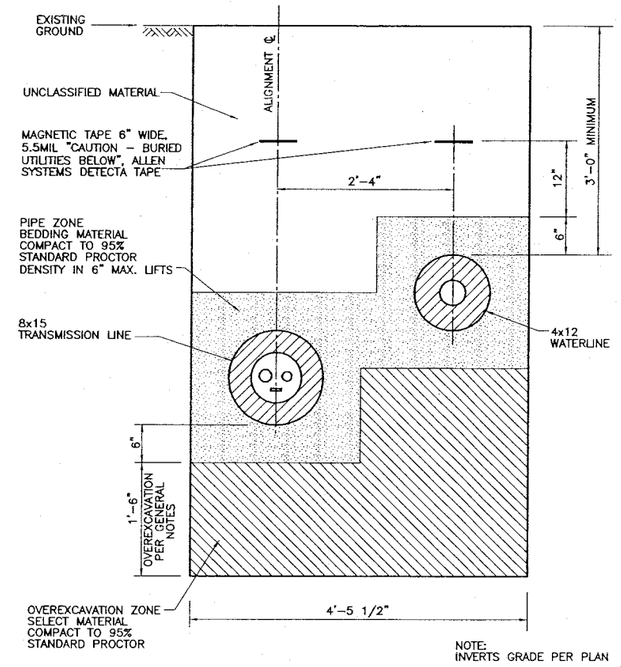

ONE TRANSMISSION LINE AND ONE WATERLINE TRENCH SECTION — F

SCALE: 1" = 1'-0"

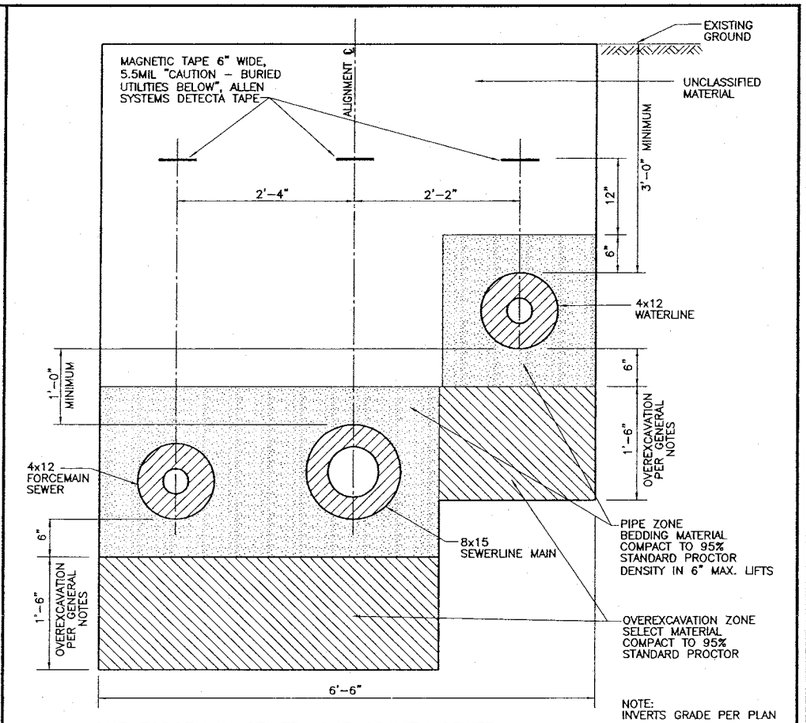

ONE FORCEMAIN SEWER, ONE GRAVITY SEWER AND ONE WATERLINE TRENCH SECTION — G

SCALE: 1" = 1'-0"

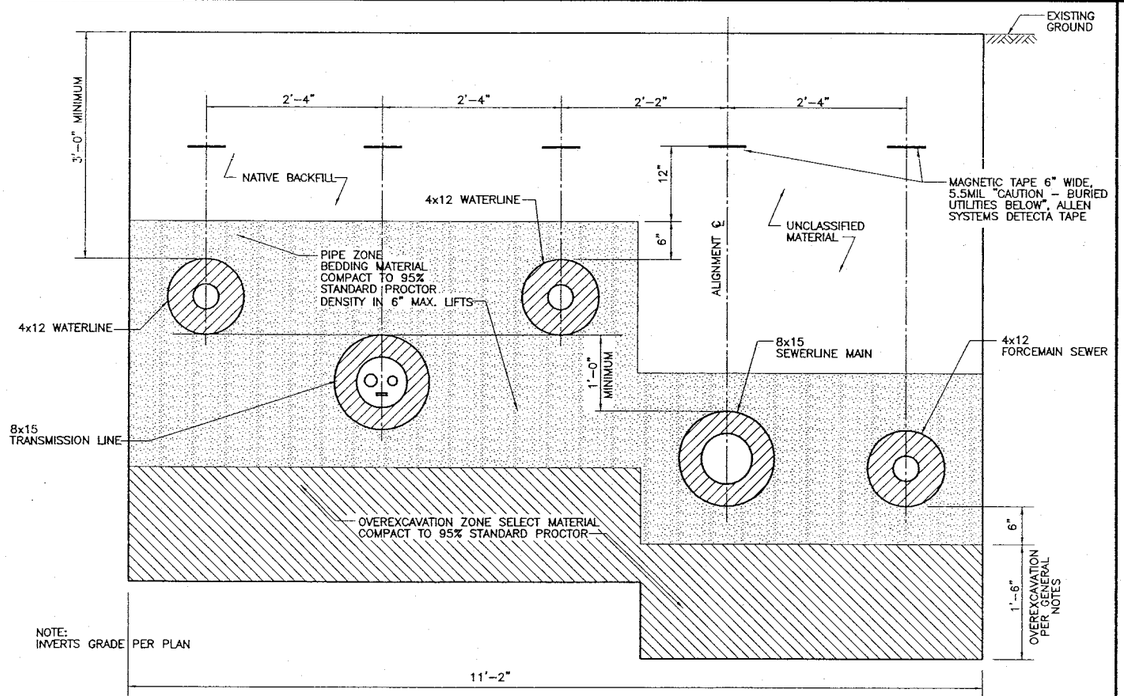

TWO WATERLINES, ONE TRANSMISSION LINE, ONE FORCEMAIN SEWER AND ONE GRAVITY SEWER TRENCH SECTION — H

SCALE: 1" = 1'-0"

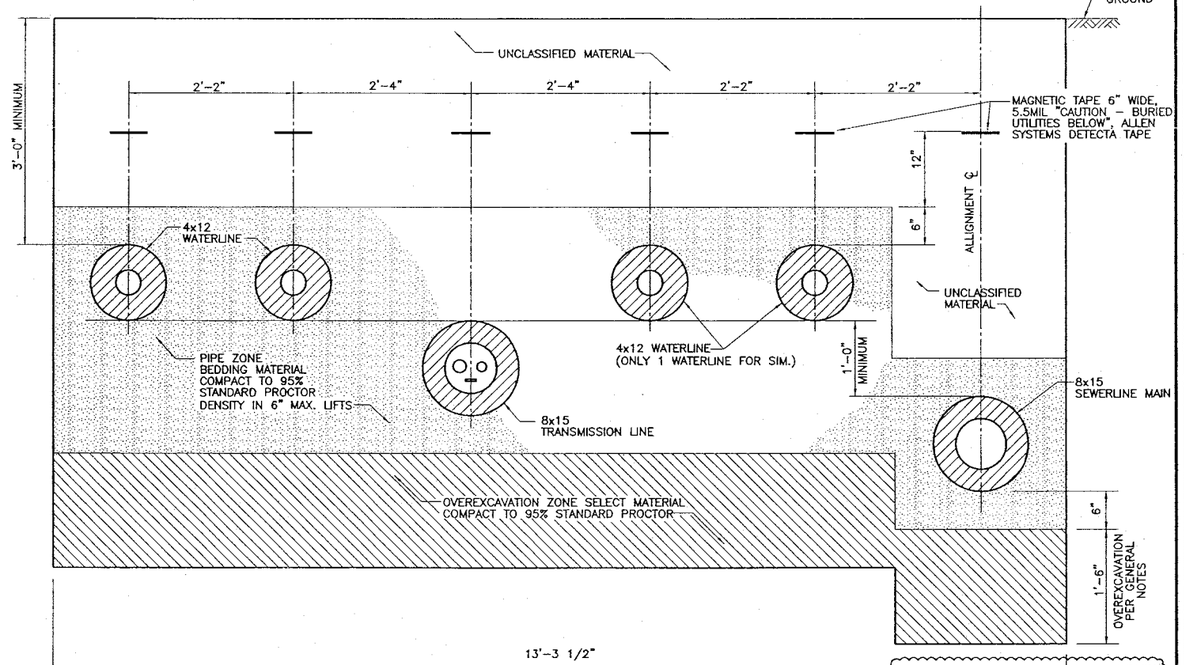

NOTE: INVERTS GRADE PER PLAN

ONE GRAVITY SEWER LINE, ONE TRANSMISSION LINE AND FOUR WATERLINES TRENCH SECTION — J

SCALE: 1" = 1'-0"

NOTES:
1. FIELD NOTES SHOULD BE RESEARCHED ALONG WITH THE PLAN INFORMATION, IN ANY FUTURE DIGGING, OR DESIGNING.
2. TEXT ONLY WAS CHANGED. DESIGN WAS NOT CHANGED. △

RECORD DRAWING CERTIFICATE
THESE DRAWINGS REFLECT RECORDED INFORMATION OBTAINED DURING CONSTRUCTION. INFORMATION PROVIDED HEREIN IS ACCURATE TO THE BEST OF MY KNOWLEDGE.
NAME: Adam B. Loehr DATE: 6/16/06

STATE OF ALASKA 49TH ADAM B. LOEHR No. CE 4542 REGISTERED PROFESSIONAL ENGINEER

VILLAGE SAFE WATER

STATE OF ALASKA 49TH MELINDA A. TSU CE 9608 REGISTERED PROFESSIONAL ENGINEER

MONTGOMERY WATSON Anchorage, Alaska
IN ASSOCIATION WITH EDC, INC. 213 W. Fireweed Ln. Anchorage, AK 99503

TOO'GHA INC. - TANANA, ALASKA
WATER DISTRIBUTION & WASTEWATER COLLECTION SYSTEM
TRENCH SECTIONS

REVISION	BY	DATE
AGENCY REVIEW	MT	7/14/00
ISSUED FOR CONSTRUCTION	MT	5/2001
RECORD DRAWING	MT	4/2005
RECORD DRAWING	AY	5/2006

Project No. 1189078.010102
Date JULY 14, 2000
Designed MT
Drawn LF
Approved GM

Sheet No. C-19
SHEET ___ OF ___

JOB No. 1189078.010102 FILE: C:\Proj\tanana\ws_lines\asbit-2006\C19.DGN 09-JUN-2006 10:43

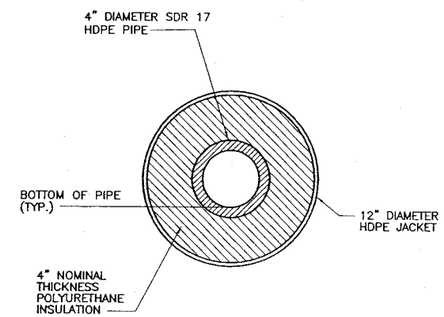

WATER MAIN PIPE SECTION 1
NOT TO SCALE

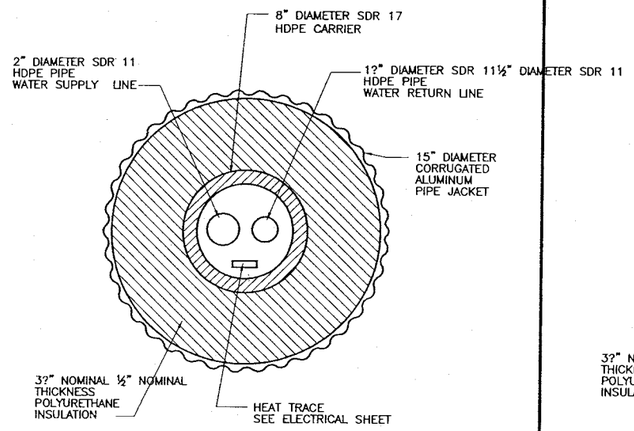

WATER TRANSMISSION PIPE SECTION 2
NOT TO SCALE

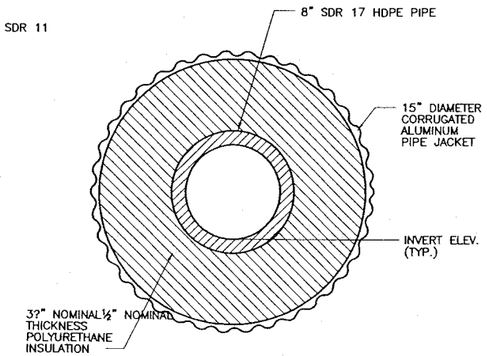

SEWER MAIN PIPE SECTION 3
NOT TO SCALE

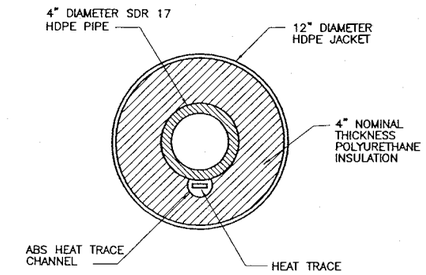

FORCE MAIN SEWER PIPE SECTION 4
NOT TO SCALE

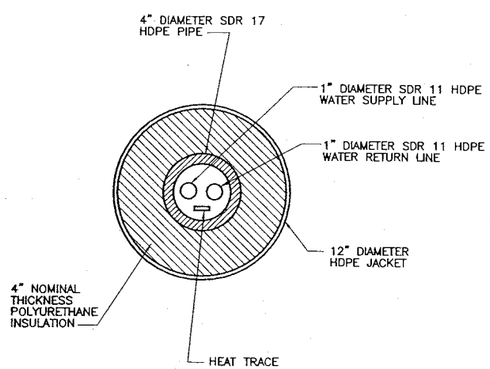

WATER SERVICE CARRIER PIPE SECTION 5
NOT TO SCALE

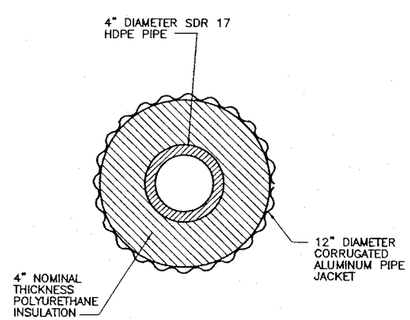

SEWER SERVICE PIPE SECTION 6
NOT TO SCALE

PIPE MATERIAL SPECIFICATIONS

CORE PIPE:	HIGH-DENSITY POLYETHYLENE (HDPE), CELL CLASSIFICATION PE345434C PER ASTM D3350, DRISCO 1000, OR APPROVED EQUAL.
INSULATION:	RIGID CLOSED-CELL POLYURETHANE FOAM, WITH DENSITY 2.5-3.5 POUNDS PER CUBIC FEET.
HDPE JACKET:	HDPE, CELL CLASSIFICATION PE345434C PER ASTM D3350, 150 MIL MINIMUM THICKNESS.
ALUMINUM JACKET:	CORRUGATED ALUMINUM, MEETING AASHTO SPECIFICATION M196 AND FEDERAL SPECIFICATION WW-P-402, 16 GAUGE.
HEAT TRACE CHANNEL:	FULLY ENCLOSED CHANNEL, ACRYLONITRILE BUTADIENE STYREA (ABS) OR HDPE MATERIAL.
HEAT SHRINK WRAP:	36-INCH WIDE WRAP AND CLOSURE STRIP, CANUSAWRAP WTC-B-900-BK, OR APPROVED EQUAL. WRAP DIMENSION SHALL BE THE ACTUAL PIPE DIAMETER PLUS A 4-INCH OVERLAP.
POLYMER COATING:	TWO COMPONENT, 100 MIL MINIMUM THICKNESS, 100% SOLIDS POLYUREA ELASTOMER, POLYSHILD SS-100 HI-E, OR APPROVED EQUAL.

NOTES:
1. FIELD NOTES SHOULD BE RESEARCHED ALONG WITH THE PLAN INFORMATION, IN ANY FUTURE DIGGING, OR DESIGNING.
2. TEXT ONLY WAS CHANGED. DESIGN WAS NOT CHANGED. △2

RECORD DRAWING CERTIFICATE
THESE DRAWINGS REFLECT RECORDED INFORMATION OBTAINED DURING CONSTRUCTION. INFORMATION PROVIDED HEREIN IS ACCURATE TO THE BEST OF MY KNOWLEDGE.
NAME Allyn E. Parker DATE 6/14/06

STATE OF ALASKA ALLYN E. PARKER No. CE 9486 REGISTERED PROFESSIONAL ENGINEER

VILLAGE SAFE WATER

STATE OF ALASKA MELVIN A. TSU No. CE 9486 REGISTERED PROFESSIONAL ENGINEER

MONTGOMERY WATSON
Anchorage, Alaska
IN ASSOCIATION WITH
EDC, INC.
ENGINEERING DESIGN CONSULTANTS
Anchorage, Alaska

TOO'GHA INC. - TANANA, ALASKA
WATER DISTRIBUTION & WASTEWATER COLLECTION SYSTEM
PIPE SECTIONS

REVISION	BY	DATE
AGENCY REVIEW	MT	7/14/00
ISSUED FOR CONSTRUCTION	MT	5/2001
△1 RECORD DRAWING	MT	4/2005
△2 RECORD DRAWING	AY	5/2006

Project No. 1189078.010102
Date JULY 14, 2000
Designed MT
Drawn LF
Approved GM

Sheet No. C-20
SHEET ___ OF ___

JOB No.1189078.010102 TIME: 09-JUN-2006 10:44 FILE: C:\Proj\tanana\ws_lines\cabit-2006\C20.DGN

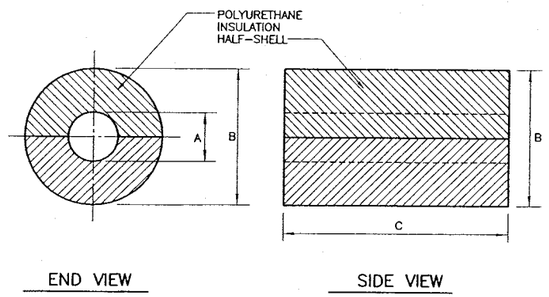

HALF SHELL	A	B	C
4x12	4⅝"	13"	24"
8x15	8¾"	15"	24"

NOTE:

1. SEE FORCE MAIN SEWER JOINT DETAIL FOR HEAT TRACE CONDUIT CUTOUT REQUIREMENTS.
2. MANUFACTURER SHALL SUPPLY HALF-SHELLS PRECUT TO DIMENSIONS SHOWN.

INSULATION HALF-SHELL DETAIL — 1 / –

NOT TO SCALE

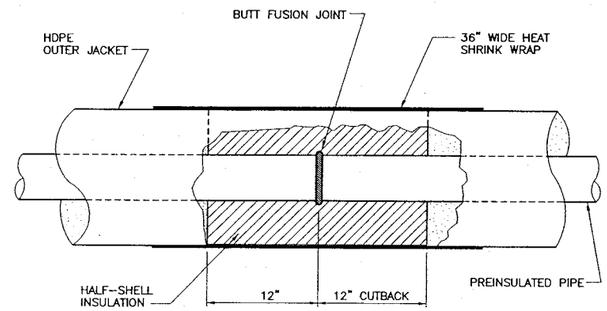

WATER LINE JOINT DETAIL — 2 / –

NOT TO SCALE

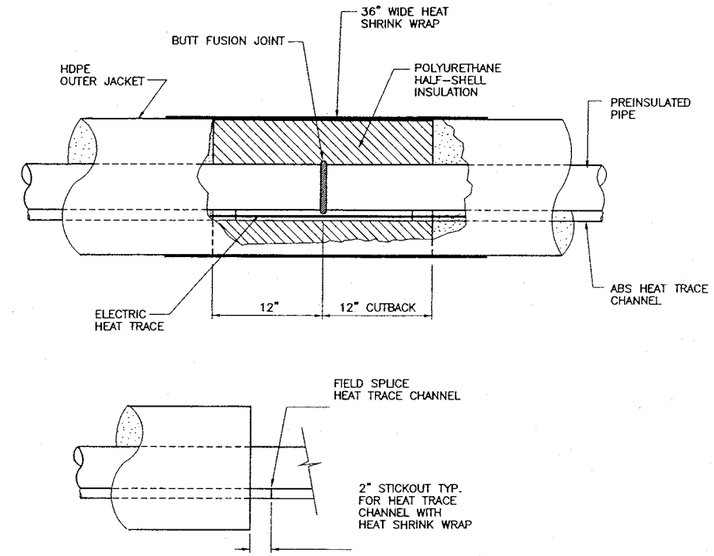

FORCE MAIN SEWER JOINT DETAIL — 3 / –

NOT TO SCALE

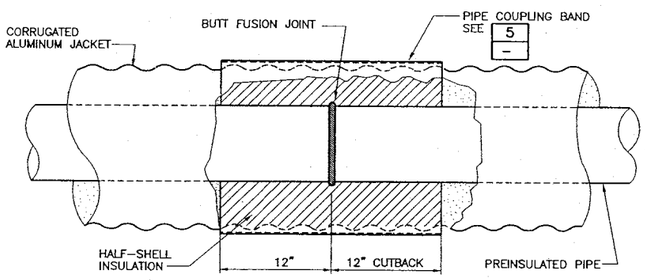

GRAVITY SEWER AND TRANSMISSION LINE JOINT DETAIL — 4 / –

NOT TO SCALE

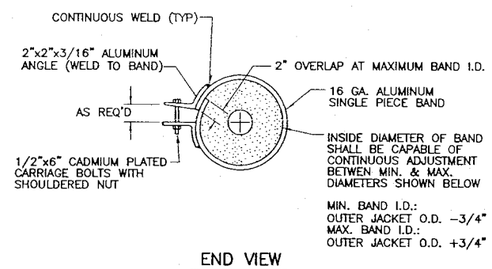

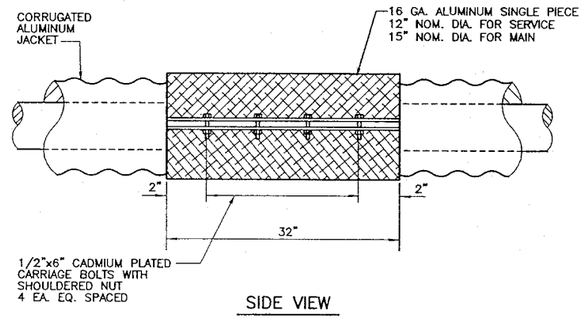

PIPE COUPLING BAND DETAIL — 5 / –

NOT TO SCALE

NOTES:
1. FIELD NOTES SHOULD BE RESEARCHED ALONG WITH THE PLAN INFORMATION, IN ANY FUTURE DIGGING, OR DESIGNING.
2. TEXT ONLY WAS CHANGED. DESIGN WAS NOT CHANGED. △

RECORD DRAWING CERTIFICATE

THESE DRAWINGS REFLECT RECORDED INFORMATION OBTAINED DURING CONSTRUCTION. INFORMATION PROVIDED HEREIN IS ACCURATE TO THE BEST OF MY KNOWLEDGE.

NAME: Allyn E. Jackson DATE: 6/16/06

STATE OF ALASKA — ALLYN E. JACKSON — No. CE 4342 — REGISTERED PROFESSIONAL ENGINEER

VILLAGE SAFE WATER

STATE OF ALASKA — MELINDA A. TSU — CE 9408 — REGISTERED PROFESSIONAL ENGINEER

MONTGOMERY WATSON
Anchorage, Alaska
IN ASSOCIATION WITH
EDC, INC.
510 W. 7th Avenue
Anchorage, AK 99501

TOO'GHA INC. – TANANA, ALASKA
WATER DISTRIBUTION & WASTEWATER COLLECTION SYSTEM

PIPE JOINT DETAILS

REVISION	BY	DATE
AGENCY REVIEW	MT	7/14/00
ISSUED FOR CONSTRUCTION	MT	5/2001
△1 RECORD DRAWING	MT	4/2005
△2 RECORD DRAWING	AY	5/2006

Project No. 1189078.01010.2
Date JULY 14, 2000
Designed MT
Drawn LF
Approved GM

Sheet No. C–21
SHEET ___ OF ___

JOB No.1189078.01010.2 DATE: 09-JUN-2006 10:44. FILE: C:\Proj\tanana\wa_lines\asbit-2006\C21.DGN

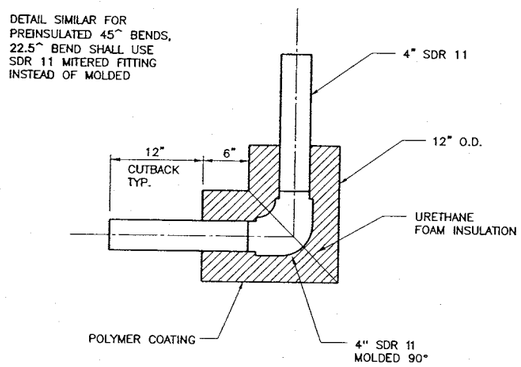

WATER MAIN 90° BEND DETAIL — 1 / –
NOT TO SCALE

NOTE:
1. FIELD INSTALL HALF-SHELL AROUND FIELD BUTT FUSED JOINTS. CAULK ALL LATERAL SEAMS PRIOR TO INSTALLING COUPLING BAND.

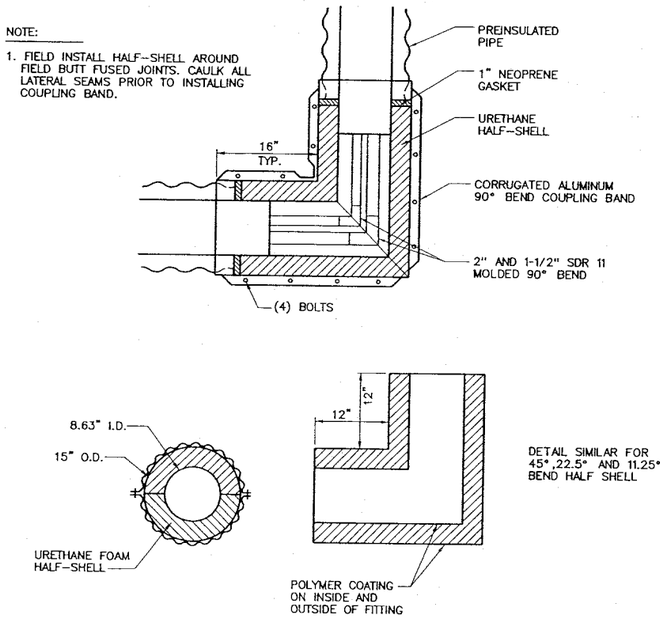

TRANSMISSION LINE 90° BEND DETAIL — 2 / –
NOT TO SCALE

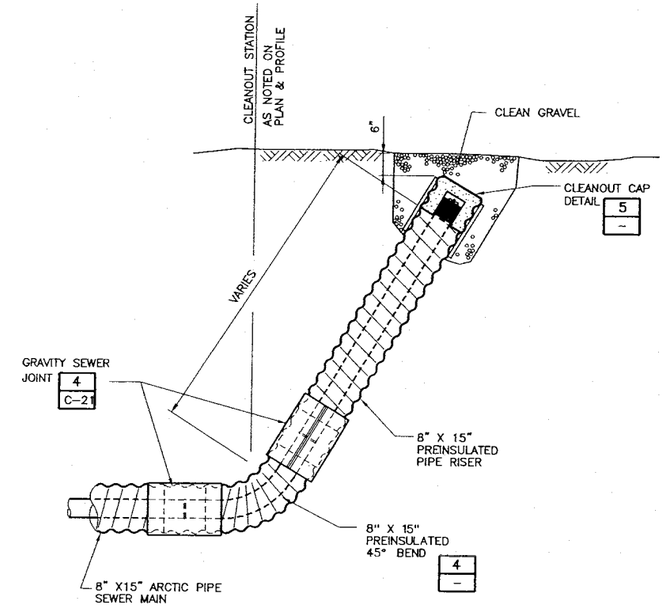

GRAVITY SEWER MAIN CLEANOUT DETAIL — 3 / –
NOT TO SCALE

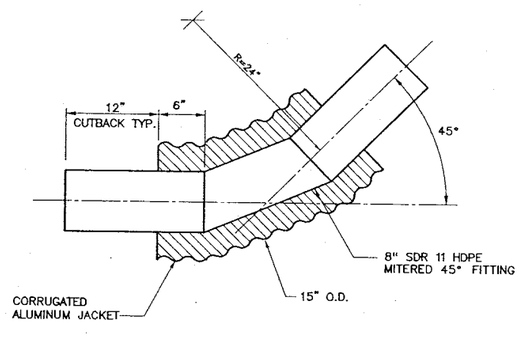

GRAVITY SEWER MAIN 45° BEND DETAIL — 4 / –
NOT TO SCALE

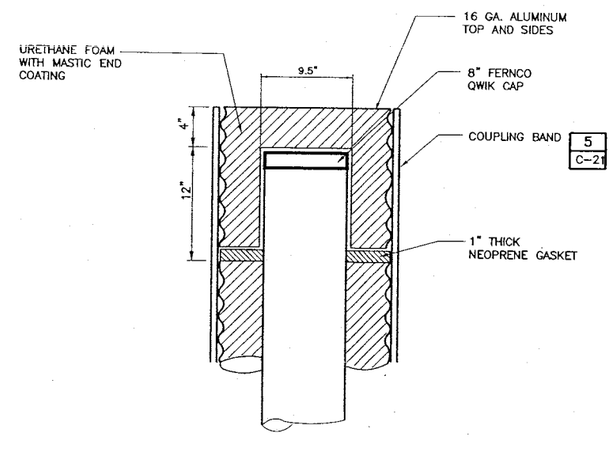

SEWER MAIN CLEANOUT CAP DETAIL — 5 / –
NOT TO SCALE

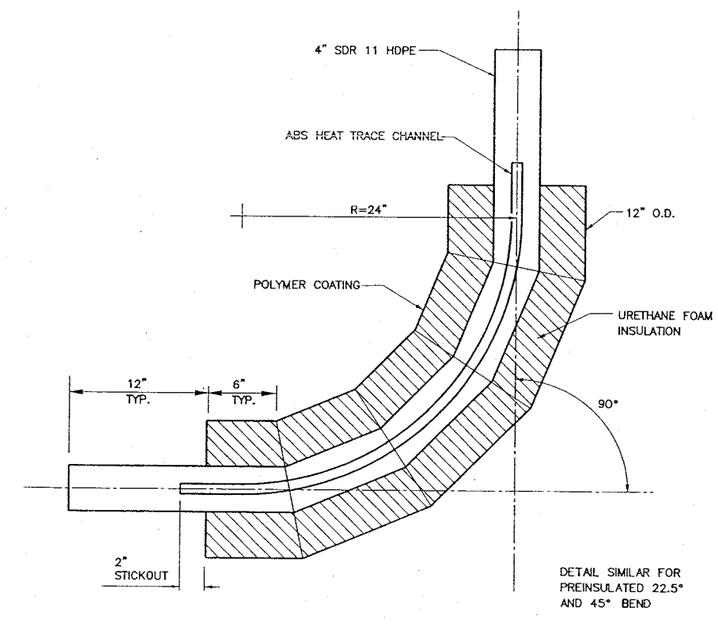

FORCEMAIN SEWER 90° BEND DETAIL — 6 / –
NOT TO SCALE

NOTES:
1. FIELD NOTES SHOULD BE RESEARCHED ALONG WITH THE PLAN INFORMATION, IN ANY FUTURE DIGGING, OR DESIGNING.
2. TEXT ONLY WAS CHANGED. DESIGN WAS NOT CHANGED. △2

RECORD DRAWING CERTIFICATE
THESE DRAWINGS REFLECT RECORDED INFORMATION OBTAINED DURING CONSTRUCTION. INFORMATION PROVIDED HEREIN IS ACCURATE TO THE BEST OF MY KNOWLEDGE.
NAME — DATE 6/16/04
STATE OF ALASKA 49TH ALLEN EDWARDS No. CE 4342 REGISTERED PROFESSIONAL ENGINEER

VILLAGE SAFE WATER

STATE OF ALASKA 49TH MELINDA A. TSU CE 9406 REGISTERED PROFESSIONAL ENGINEER

MONTGOMERY WATSON
Anchorage, Alaska
IN ASSOCIATION WITH
EDC, INC.
ENGINEERING CONSULTANTS

TOO'GHA INC. – TANANA, ALASKA
WATER DISTRIBUTION & WASTEWATER COLLECTION SYSTEM
MAINLINE PIPE FITTING DETAILS

REVISION	BY	DATE
AGENCY REVIEW	MT	7/14/00
ISSUED FOR CONSTRUCTION	MT	5/2001
△1 RECORD DRAWING	MT	4/2005
△2 RECORD DRAWING	AY	5/2006

Project No. 1189078.010102
Date JULY 14, 2000
Designed MT
Drawn LF
Approved GM

Sheet No. C-22
SHEET ___ OF ___

JOB No.1189078.010102 TIME: 09-JUN-2006 10:44 FILE: C:\Proj\tanana\ws_lines\asbilt-2006\C22.DGN

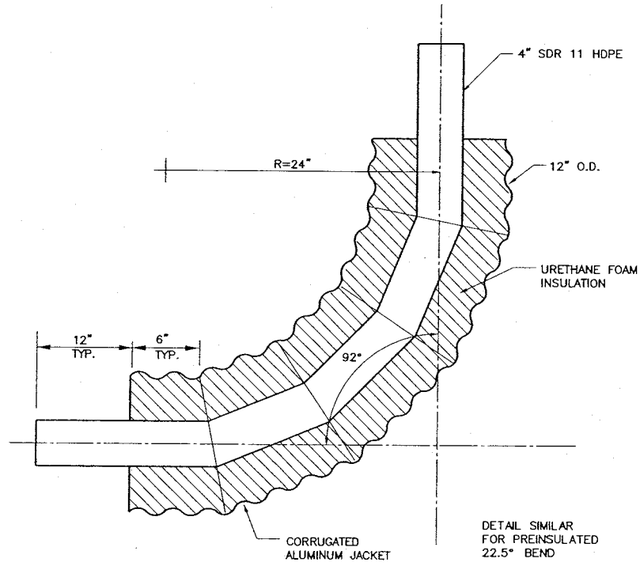

SEWER SERVICE LINE 92° BEND DETAIL | 1 / –
NOT TO SCALE

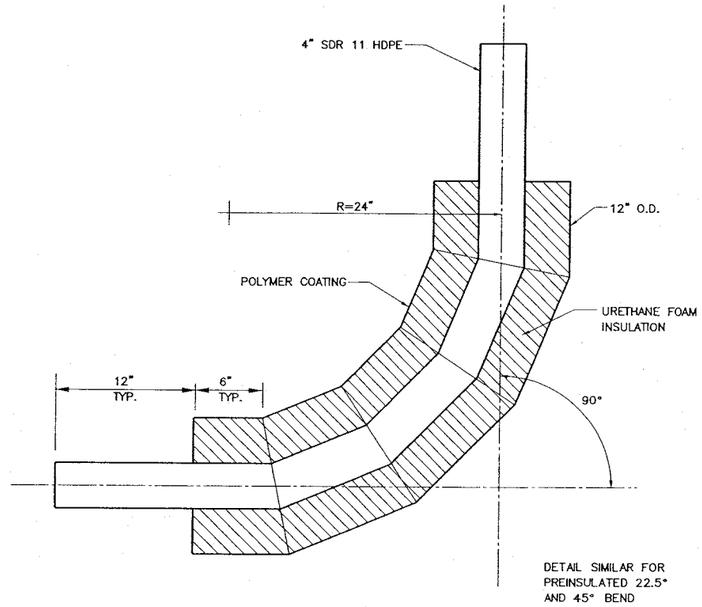

WATER SERVICE LINE 90° BEND DETAIL | 2 / –
NOT TO SCALE

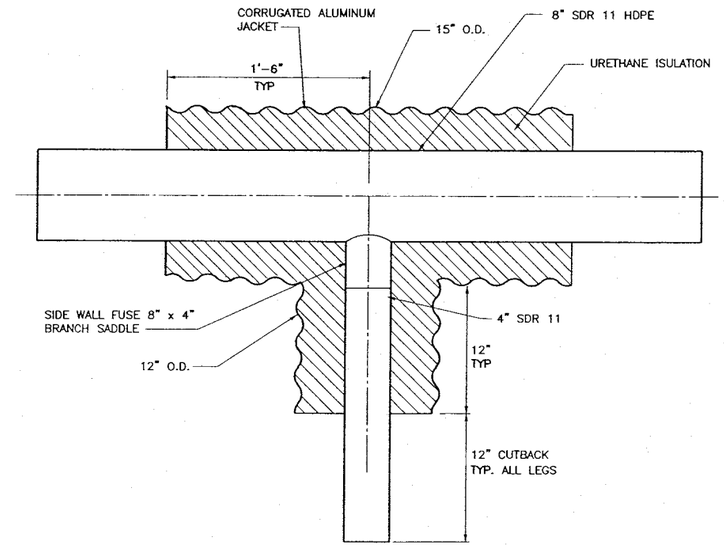

SEWER SERVICE TEE DETAIL | 3 / –
NOT TO SCALE

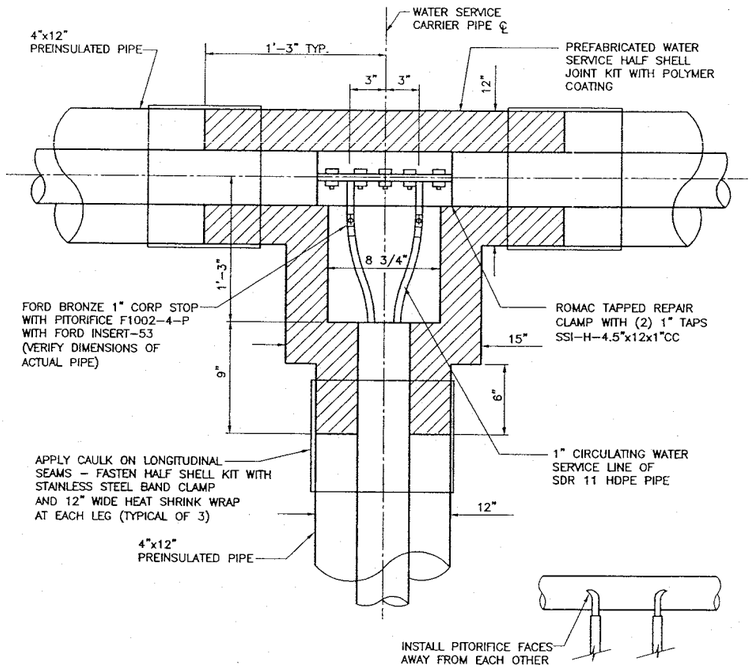

WATER SERVICE TEE DETAIL | 4 / –
NOT TO SCALE

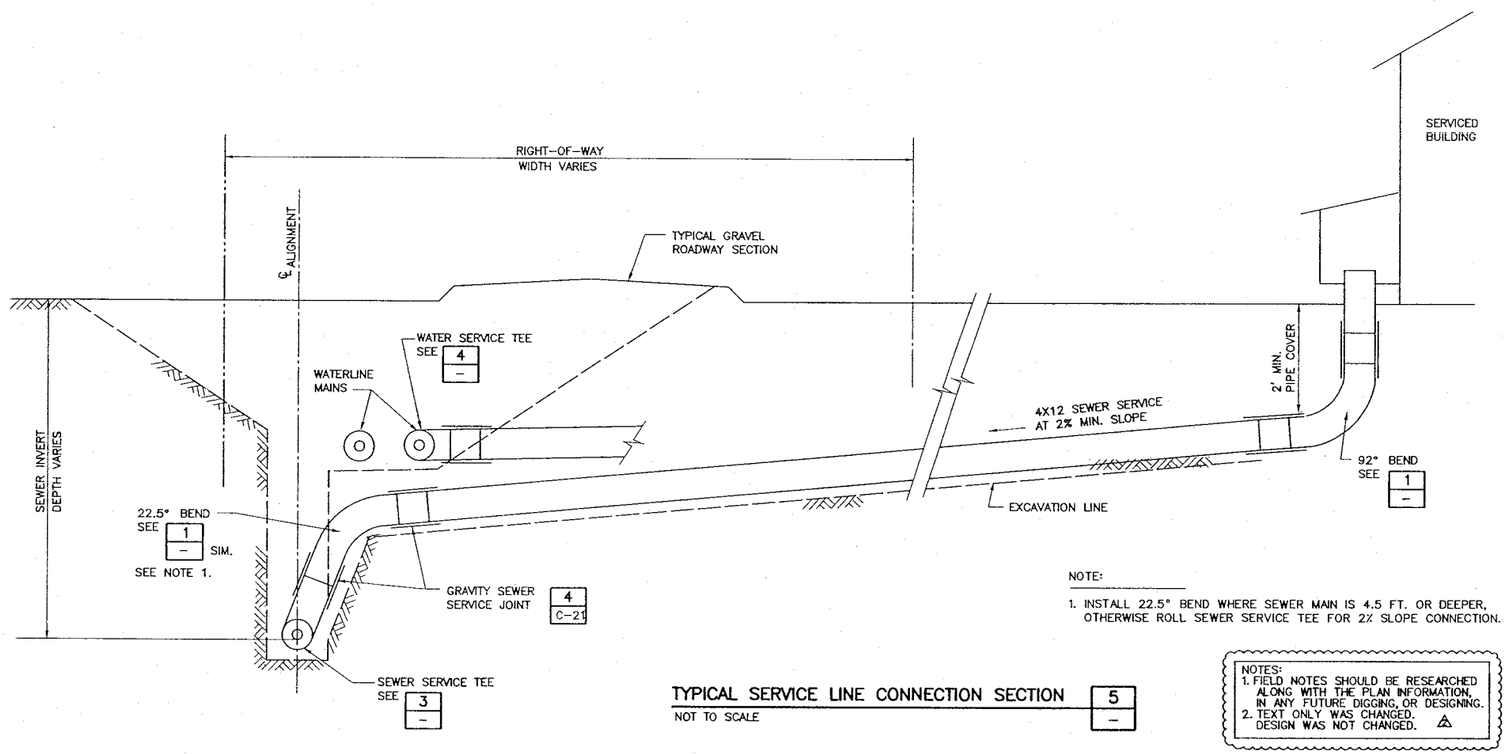

NOTE:

1. INSTALL 22.5° BEND WHERE SEWER MAIN IS 4.5 FT. OR DEEPER, OTHERWISE ROLL SEWER SERVICE TEE FOR 2% SLOPE CONNECTION.

TYPICAL SERVICE LINE CONNECTION SECTION | 5 / –
NOT TO SCALE

NOTES:
1. FIELD NOTES SHOULD BE RESEARCHED ALONG WITH THE PLAN INFORMATION, IN ANY FUTURE DIGGING, OR DESIGNING.
2. TEXT ONLY WAS CHANGED. DESIGN WAS NOT CHANGED. 2

RECORD DRAWING CERTIFICATE
THESE DRAWINGS REFLECT RECORDED INFORMATION OBTAINED DURING CONSTRUCTION. INFORMATION PROVIDED HEREIN IS ACCURATE TO THE BEST OF MY KNOWLEDGE.
NAME Allyne Baker DATE 6/16/06

STATE OF ALASKA 49TH ALLYNE E. BAKER No. CE 9408 REGISTERED PROFESSIONAL ENGINEER

VILLAGE SAFE WATER

STATE OF ALASKA 49TH MELINDA A. TSU No. CE 9408 REGISTERED PROFESSIONAL ENGINEER

MONTGOMERY WATSON
Anchorage, Alaska
IN ASSOCIATION WITH
EDC, INC.
711 H Street
Anchorage, AK 99501

TOO'GHA INC. - TANANA, ALASKA
WATER DISTRIBUTION & WASTEWATER COLLECTION SYSTEM
SERVICE LINE PIPE FITTING DETAILS

REVISION	BY	DATE
AGENCY REVIEW	MT	7/14/00
ISSUED FOR CONSTRUCTION	MT	5/2001
1 RECORD DRAWING	MT	4/2005
2 RECORD DRAWING	AY	5/2006

Project No. 1189078.010102
Date JULY 14, 2000
Designed MT
Drawn LF
Approved GM

Sheet No. C-23
SHEET ___ OF ___

JOB No.1189078.010102 DATE: 09-JUN-2006 10:45 FILE: C:\Proj\tanana\wsa_lines\asbit-2006\C23.DGN

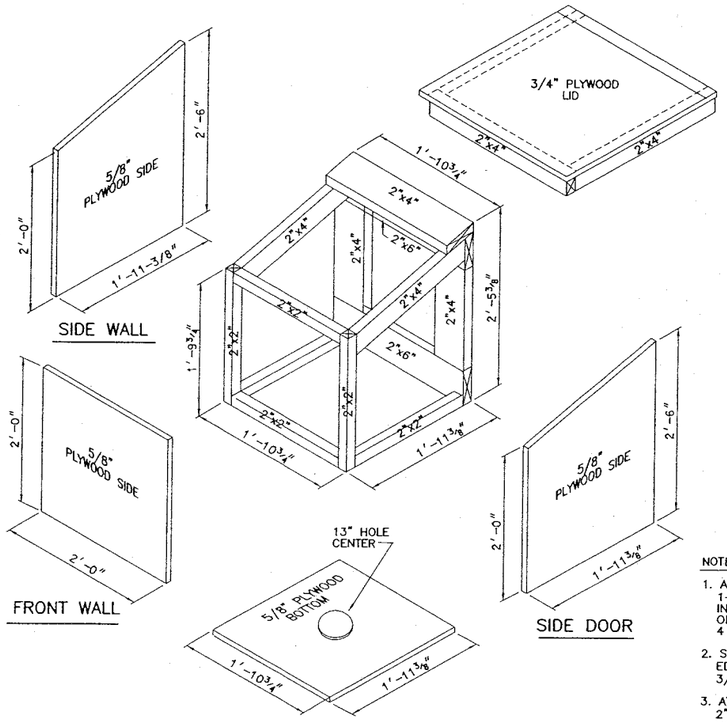

EXPLODED VIEW

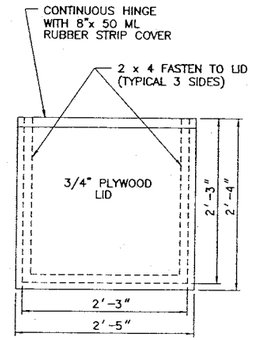

LID PLAN VIEW

NOTES:

1. ARCTIC BOX SHALL BE LINED WITH 2 EACH 1-1/2" LAYERS OF POLYSTYRENE BOARD INSULATION, WESTERN INSULFOAM II 35 PSI OR EQUAL; TYPICAL, COVER, BOTTOM, AND 4 SIDES.
2. SECURE GALV. STEEL ROOFING AND DRIP EDGE TO 3/4" PLYWOOD COVER WITH 3/4" SELF TAPPING ROOFING SCREWS.
3. ATTACH PLYWOOD SIDES AND BOTTOM TO 2"x 2" AND 2"x 4" FRAME WITH NO. 8 x 2-1/2" CORROSION RESISTANT DRY WALL SCREWS. PREDRILL AS NECESSARY TO AVOID SPLITTING OF FRAME.
4. CAULK ALL EXPOSED SEAMS WITH SILICONE CAULK, "G.E. 50 YEAR WINDOW AND DOOR SEALANT", OR EQUAL.
5. HOUSE PLUMBING CONNECTIONS WITHIN ARCTIC BOX ARE NOT SHOWN.
6. FILL ARCTIC BOX WITH UNFACED FIBERGLASS BATT INSULATION WHEN HOUSE PLUMBING CONNECTIONS ARE COMPLETE.

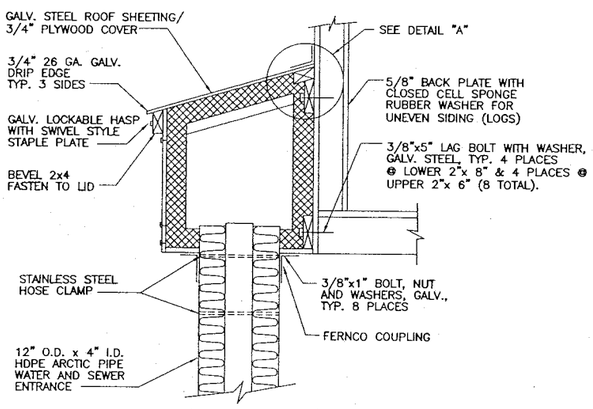

CROSS SECTION

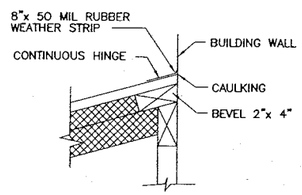

DETAIL A

ARCTIC BOX DETAILS | 1 | —
NOT TO SCALE

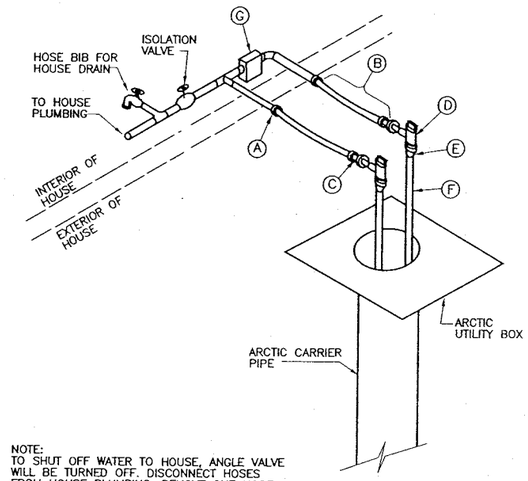

NOTE:
TO SHUT OFF WATER TO HOUSE, ANGLE VALVE WILL BE TURNED OFF. DISCONNECT HOSES FROM HOUSE PLUMBING, REMOVE ONE HOSE FROM ANGLE VALVE AND CONNECT REMAINING HOSE TO THE ANGLE VALVE (MAKE A LOOP). ANGLE VALVES ARE THEN TURNED BACK ON AND LOCKED IN OPEN POSITION.

WATER SERVICE PIPING DETAIL | 2 | —
NOT TO SCALE

MATERIALS REQUIRED

A. HOUSE PIPING ADAPTER: 1" COPPER PIPE TYPICAL WITH QEST MALE COUPLING ADAPTER 1"X1" MIPT WITH BRASS BODY AND CONE AND RING. FOR COPPER PIPE A NIBCO SWEAT COPPER ADAPTER #604/704, 1" C x 1" MIPT MAY BE SUBSITUTED FOR THE QEST FITTING.

B. CONNECTION HOSE: 1" I.D. FOOD GRADE HOSE; DAYCO 37317-1002 OR EQUAL, TWO PLY, 150 PSI, -40 F TO 180 F, FDA APPROVED. CUT TO LENGTH IN FIELD.

BOTH ENDS SHALL BE FITTED WITH BRASS LONG SHANK INSERTS WITH 1" FIPT FEMALE SWIVEL NUT WITH GASKETS. DIXON #BLS848 OR EQUAL. EACH INSERT FITTING SHALL BE SECURED WITH 2 EA. ADJUSTABLE STAINLESS STEEL CLAMPS. DIXON #HS20 WORM GEAR CLAMPS, GRIP 13/16" TO 1-3/4", OR BAND-IT JR., TYPE 201, 1-1/2"x 1/2"x 0.30".

C. BRASS NIPPLE: 1" MIPT x 1-1/2" MIPT.

D. ANGLE BALL SERVICE VALVE: FORD ANGLE BALL VALVE AV11-444W, 1" FIPT x 1" FIPT, 150 PSI WORKING PRESSURE. "W" INDICATES PADLOCK WINGS ONLY.

E. PACK JOINT COUPLING: FORD PACK JOINT C86-44, 1" PEP x 1" MIPT. PROVIDE FORD STAINLESS STEEL INSERT STIFFENER #72 FOR 1" SDR 11, IPS HDPE, 1.075" I.D.

F. HDPE PIPE: DRISCOPIPE 8600 HDPE, 1" IPS, SDR 11, 160 PSI, 1.075 I.D., NSF APPROVED.

G. INSTALL CIRCULATING PUMP, IF LINE IS GREATER THAN 90 FEET, GRUNFOS UP15-42SU, OR EQUAL. ASSURE THAT PUMP IS INSTALLED SO THAT FLOW DIRECTION IS COMPATIBLE WITH MAIN LINE PITORFICE CIRCULATION DIRECTION.

H. ARCTIC DRAIN HOUSING - FERNCO OR PROCESS TECHNOLOGY MODEL 325. FIT INSIDE RUBATEX DONUTS, 1"x 13", 4-1/2" ID.

NOTES:
1. FIELD NOTES SHOULD BE RESEARCHED ALONG WITH THE PLAN INFORMATION, IN ANY FUTURE DIGGING, OR DESIGNING.
2. TEXT ONLY WAS CHANGED. DESIGN WAS NOT CHANGED. △2

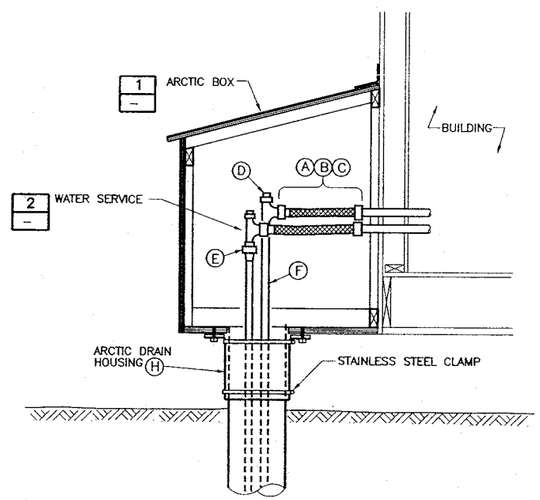

WATER SERVICE BUILDING CONNECTION | 3 | —
NOT TO SCALE

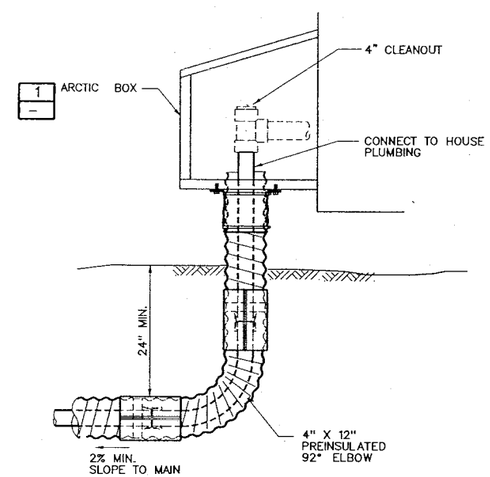

SEWER SERVICE BUILDING CONNECTION | 4 | —
NOT TO SCALE

RECORD DRAWING CERTIFICATE
THESE DRAWINGS REFLECT RECORDED INFORMATION OBTAINED DURING CONSTRUCTION. INFORMATION PROVIDED HEREIN IS ACCURATE TO THE BEST OF MY KNOWLEDGE.
NAME Allyne Yoakum DATE 6/16/06
STATE OF ALASKA ALLYNE E. YOAKUM No. CE 4342 REGISTERED PROFESSIONAL ENGINEER

VILLAGE SAFE WATER

STATE OF ALASKA MELINDA A. TSU CE 9608 REGISTERED PROFESSIONAL ENGINEER

MONTGOMERY WATSON
Anchorage, Alaska
IN ASSOCIATION WITH
EDC, INC.
733 W. 5th Avenue, Suite 200
Anchorage, Alaska 99501

TOO'GHA INC. - TANANA, ALASKA
WATER DISTRIBUTION & WASTEWATER COLLECTION SYSTEM
SERVICE CONNECT DETAILS

REVISION	BY	DATE
AGENCY REVIEW	MT	7/14/00
ISSUED FOR CONSTRUCTION	MT	5/2001
△1 RECORD DRAWING	MT	4/2005
△2 RECORD DRAWING	AY	5/2006

Project No. 1189078.010102
Date JULY 14, 2000
Designed MT
Drawn LF
Approved GM

Sheet No. C-24
SHEET ___ OF ___

JOB No. 1189078.010102 DATE: 09-JUN-2006 10:45 FILE: C:\Proj\tanana\ws_lines\asbit-2006\C24.DGN

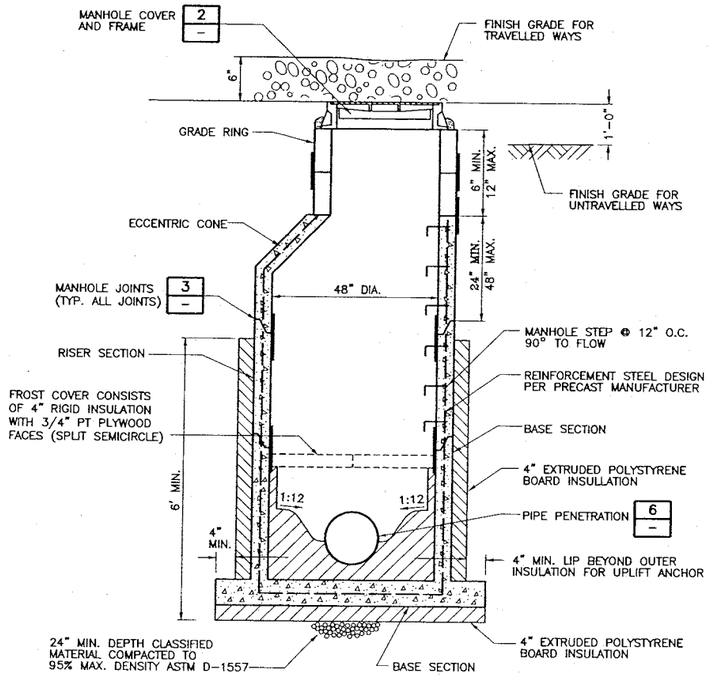

MANHOLE DETAIL 1
NOT TO SCALE

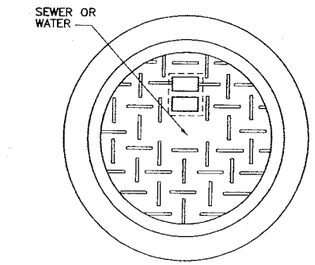

NOTES:

1. INSTALL MANHOLE COVER AND FRAME ACCORDING TO RIM ELEVATIONS AS SHOWN ON PLANS
2. PLACE A 1" BED OF MORTAR UNDER FRAME TO ENSURE SOLID ALL-AROUND SEATING OF CAST IRON FRAME ON CONCRETE GRADE RINGS.
3. FRAME SHALL BE MACHINED TO FIT NEOPRENE GASKET.
4. FRAME AND COVER SHALL BE CAST IRON OLYMPIC CONSTRUCTION CASTINGS NO. MH25WT, OR APPROVED EQUAL.
5. COVER SHALL HAVE WORD "SEWER" CAST IN FOR MANHOLES.

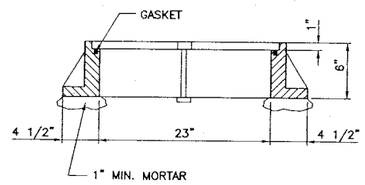

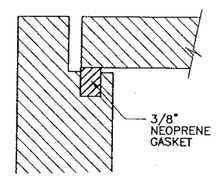

GASKET DETAIL

MANHOLE COVER AND FRAME 2
NOT TO SCALE

NOTES:
1. FIELD NOTES SHOULD BE RESEARCHED ALONG WITH THE PLAN INFORMATION, IN ANY FUTURE DIGGING, OR DESIGNING.
2. TEXT ONLY WAS CHANGED. DESIGN WAS NOT CHANGED. △

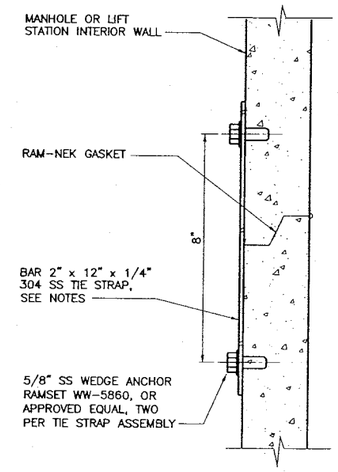

CROSS-SECTION

NOTES:

1. TIE STRAPS SHALL BE INSTALLED AT MANHOLES OR LIFT STATIONS THAT ARE LOCATED WITHIN AREAS WHICH HAVE THAW UNSTABLE SOIL CONDITIONS.
2. EACH TIE STRAP SHALL HAVE ONE 3/4" ROUND BOLT HOLE AT EACH END.
3. THREE EACH TIE STRAP ASSEMBLIES SHALL BE PROVIDED PER EACH JOINT IN 4' MANHOLES AT 120° FROM EACH OTHER.
4. FOUR EACH TIE STRAP ASSEMBLIES SHALL BE PROVIDED PER EACH JOINT IN 6' DIA. LIFT STATION AT 90° FROM EACH OTHER.

MANHOLE TIE STRAPS DETAIL 3
NOT TO SCALE

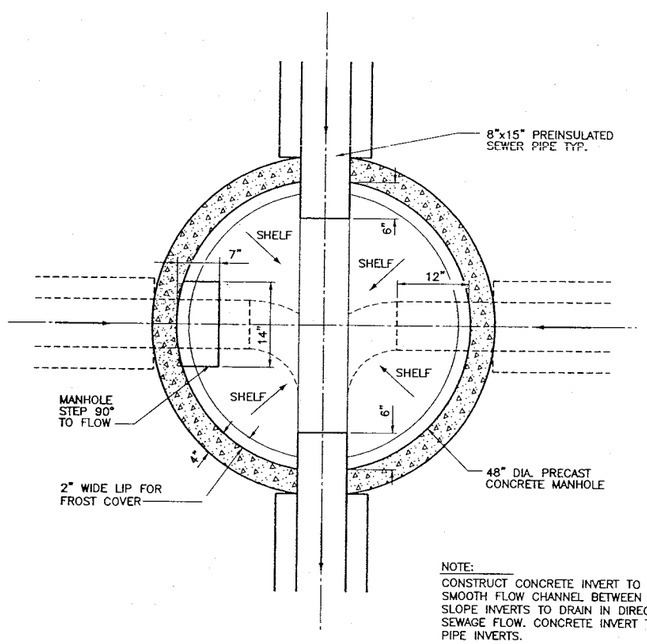

NOTE:
CONSTRUCT CONCRETE INVERT TO PROVIDE SMOOTH FLOW CHANNEL BETWEEN PIPES. SLOPE INVERTS TO DRAIN IN DIRECTION OF SEWAGE FLOW. CONCRETE INVERT TO MATCH PIPE INVERTS.

MANHOLE BASE PLAN 4
NOT TO SCALE

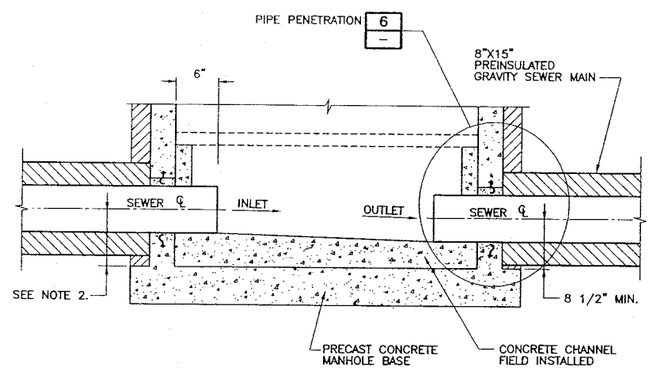

NOTES:

1. MANHOLE REINFORCEMENT NOT SHOWN, THIS DETAIL, FOR CLARITY.
2. INLET INVERT ELEVATION(S) SHALL BE 1 1/4" (0.10') ABOVE OUTLET INVERT, UNLESS NOTED OTHERWISE ON PLAN & PROFILE DRAWINGS.
3. MATCH CROWN OF PIPES AT FORCEMAIN TRANSITION MANHOLES.

MANHOLE CHANNEL 5
NOT TO SCALE

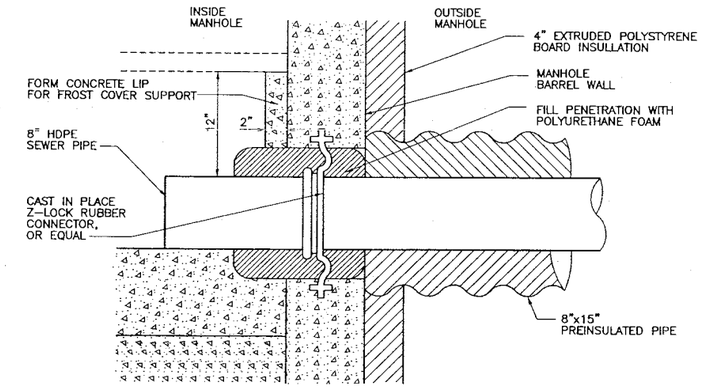

CROSS SECTION OF Z-LOCK AFTER INSTALLATION

PIPE PENETRATION DETAIL 6
NOT TO SCALE

SANITARY MANHOLE NOTES:

1. PRECAST MANHOLE SECTIONS SHALL CONFORM TO ASTM C-478
2. PRECAST SECTIONS SHALL BE SELECTED TO PROVIDE THE CORRECT TOTAL HEIGHT WITH THE FEWEST JOINTS
3. RAM-NEK SEALANT, OR APPROVED EQUAL RUBBER GASKET SHALL BE INSTALLED AT ALL PRECAST JOINTS
4. MANHOLE STEPS SHALL BE 1/2" GRADE 60 STEEL REINFORCEMENT ROD ENCASED IN POLYPROPYLENE COPOLYMER PLASTIC. STEPS SHALL HAVE TREAD WIDTH OF 14"
5. MANHOLE SHALL BE WRAPPED WITH 2 LAYERS OF 6 MIL PLASTIC SHEETING PRIOR TO BACKFILL
6. ALL GRANULAR BACKFILL SHALL BE PLACED IN 6" LIFTS AND COMPACTED TO 95% MAX. DENSITY
7. SAFE EXCAVATION SIDE SLOPES TO BE DETERMINED BY SUPERINTENDENT IN FIELD

RECORD DRAWING CERTIFICATE
THESE DRAWINGS REFLECT RECORDED INFORMATION OBTAINED DURING CONSTRUCTION. INFORMATION PROVIDED HEREIN IS ACCURATE TO THE BEST OF MY KNOWLEDGE.
NAME DATE 6/14/06

VILLAGE SAFE WATER

MONTGOMERY WATSON Anchorage, Alaska
IN ASSOCIATION WITH EDC, INC. TIDEWATER ENGINEERS PORTLAND, OR 97205

TOO'GHA INC. - TANANA, ALASKA
WATER DISTRIBUTION & WASTEWATER COLLECTION SYSTEM
SEWER MANHOLE DETAILS

REVISION	BY	DATE
AGENCY REVIEW	MT	7/14/00
ISSUED FOR CONSTRUCTION	MT	5/2001
△1 RECORD DRAWING	MT	4/2005
△2 RECORD DRAWING	AY	5/2006

Project No. 1189078.010102
Date JULY 14, 2000
Designed MT
Drawn LF
Approved GM

Sheet No. C-26
SHEET ___ OF ___

JOB No.1189078.010102 TIME: 09-JUN-2006 10:46 FILE: C:\Proj\tanana\ws_lines\asbit-2006\C26.DGN

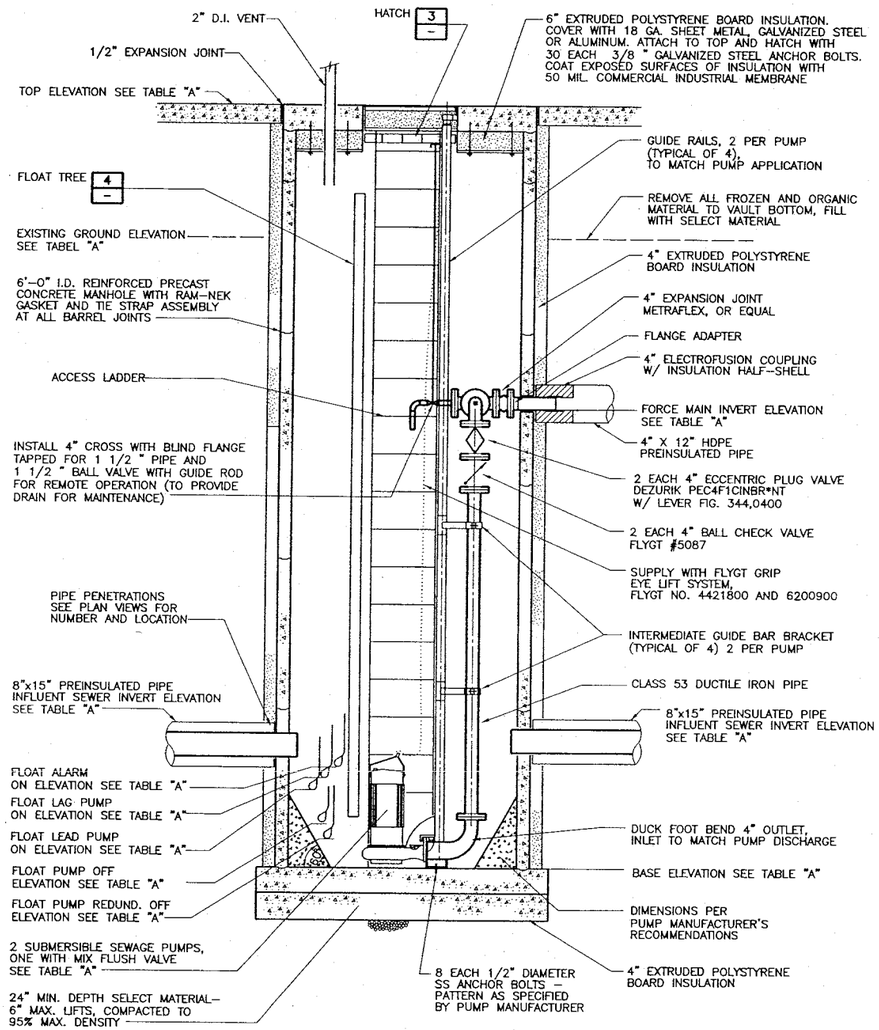

NOTE:

1. ORIENTATION OF FORCE MAIN SHOWN ROTATED 90° FOR CLARITY. SEE SHEET NOTE 1.
2. LOCATE FLOATS AWAY FROM PUMP INLET.

LIFT STATION SECTION DETAIL 1 –

NOT TO SCALE

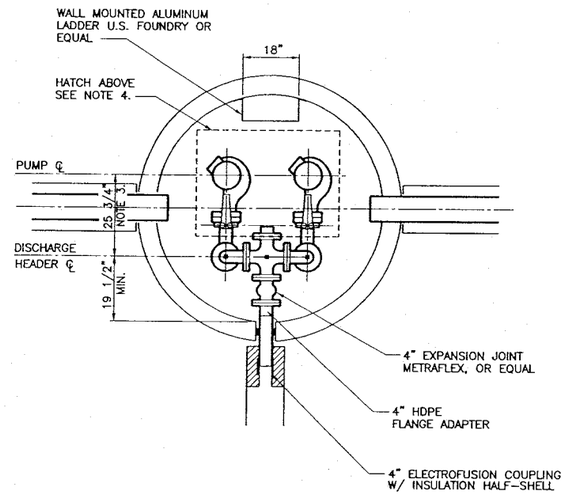

WET WELL PIPING PLAN 2 –

SCALE: 1/2" = 1'-0"

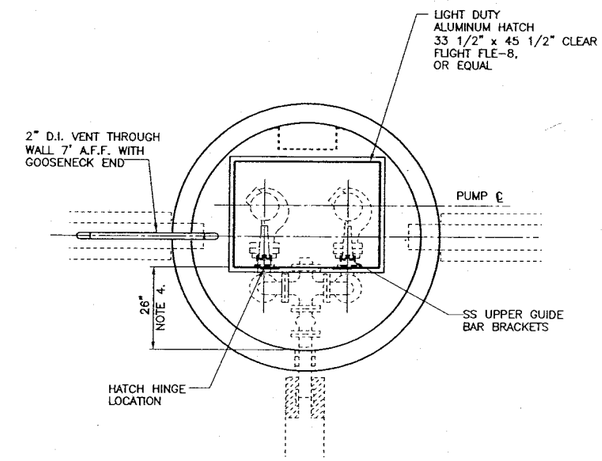

WET WELL HATCH PLAN 3 –

SCALE: 1/2" = 1'-0"

TABLE "A"

	LIFT STATION #1	LIFT STATION #2	LIFT STATION #3
TOP ELEVATION	90.5'	97.5'	89.5'
FINISH GRADE ELEVATION	90.0'	97.0'	89.0'
EXISTING GROUND ELEVATION	88.0'	95.77'	87.0'
FORCE MAIN INVERT ELEVATION	81.36'	89.52'	81.86'
INFLUENT SEWER INVERT ELEVATION	WEST 78.33'	EAST 86.13'	NORTH 80.09'
INFLUENT SEWER INVERT ELEVATION	EAST 77.83'	——	SOUTH 79.99'
INFLUENT SEWER INVERT ELEVATION	——	——	——
FLOAT ALARM ON ELEVATION	76.83'	85.13'	78.99'
FLOAT LAG PUMP ON ELEVATION	75.83'	84.13'	77.99'
FLOAT LEAD PUMP ON ELEVATION	75.33'	83.63'	77.49'
FLOAT PUMP OFF ELEVATION	73.83'	82.13'	75.99'
FLOAT PUMP REDUNDENT OFF	73.50'	81.80'	75.66'
BASE ELEVATION	72.5'	80.8'	74.66'
SEWAGE PUMP SPEC.	FLYGT CP 3102-432	FLYGT CP 3085-440	FLYGT CP 3085-436
LADDER LENGTH	16'	15'	13'

NOTES:
1. FIELD NOTES SHOULD BE RESEARCHED ALONG WITH THE PLAN INFORMATION, IN ANY FUTURE DIGGING, OR DESIGNING.
2. TEXT ONLY WAS CHANGED, DESIGN WAS NOT CHANGED. 4

SHEET NOTES:

1. SEE PLAN AND PROFILE SHEETS FOR SEWER AND FORCEMAIN PIPE ALIGNMENT INFORMATION OF EACH LIFT STATION.
2. ALL 4" DUCTILE IRON FLANGED FITTINGS SHALL BE PER AWWA C110. FLANGE ADAPTERS SHALL BE SERIES 2100 MEGAFLANGE ADAPTER AS PRODUCED BY EBAA, INC. OR APPROVED EQUAL.
3. DIMENSION MAY VARY DEPENDING ON PUMP TYPE
4. COORDINATE ALL DIMENSIONS BETWEEN PIPING LAYOUT AND WET WELL HATCH AND APPURTENANCES.
5. SUPPLY ONE 500 LB CAPACITY HOIST FOR USE WITH ALL 3 LIFT STATIONS.

RECORD DRAWING CERTIFICATE
THESE DRAWINGS REFLECT RECORDED INFORMATION OBTAINED DURING CONSTRUCTION. INFORMATION PROVIDED HEREIN IS ACCURATE TO THE BEST OF MY KNOWLEDGE.
NAME DATE

VILLAGE SAFE WATER

MONTGOMERY WATSON
Anchorage, Alaska
IN ASSOCIATION WITH
EDC, INC.

TOO'GHA INC. - TANANA, ALASKA
WATER DISTRIBUTION & WASTEWATER COLLECTION SYSTEM

LIFT STATION WET WELL DETAILS

REVISION	BY	DATE
AGENCY REVIEW	MT	7/14/00
ISSUED FOR CONSTRUCTION	MT	5/2001
1 RECORD DRAWING	MT	4/2005
2 RECORD DRAWING	AY	5/2006

Project No. 1189078.010102
Date JULY 14, 2000
Designed MT
Drawn LF
Approved GM

Sheet No. C-27
SHEET ___ OF ___

JOB No.1189078.010102 TIME: 09-JUN-2006 10:46 FILE: C:\Proj\tanana\ws_lines\rabbit-2006\C27.DGN

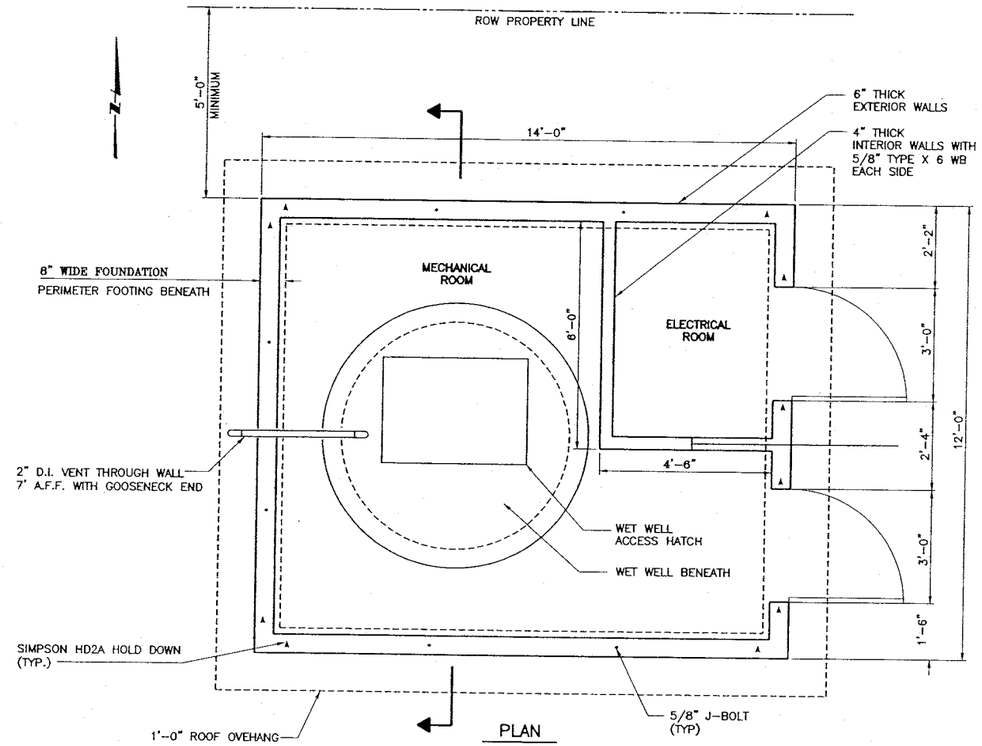

PLAN

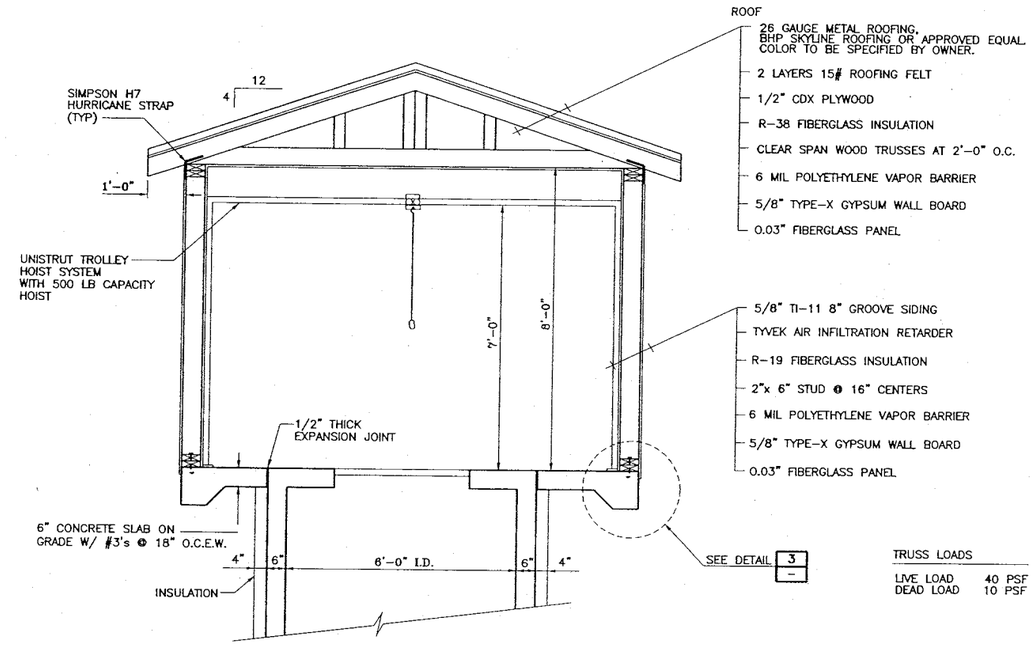

TRUSS LOADS

LIVE LOAD	40 PSF
DEAD LOAD	10 PSF

SECTION

LIFT STATION BUILDING 1 / -

SCALE: 1/2" = 1'-0"

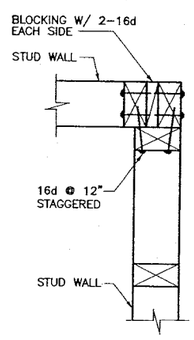

PLAN AT CORNER 2 / -

NOT TO SCALE

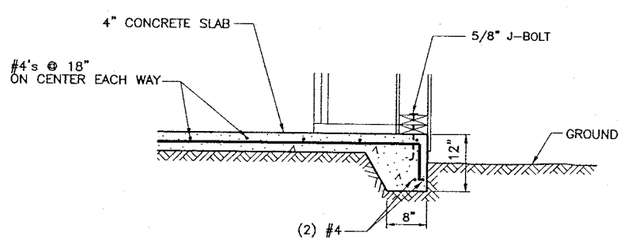

CONCRETE SLAB DETAIL 3 / -

NOT TO SCALE

NOTES:

1. EXTERIOR PAINT SHALL BE TWO COATS EXTERIOR LATEX ENAMEL. COLOR SHALL BE AS SPECIFIED BY THE OWNER.
2. DOOR SHALL BE 3' x 6'-8" x 1-3/4" FLUSH METAL, INSULATED, AND SHALL BE SHOP PRIMED AND PAINTED. DOOR PAINT SHALL BE TWO COATS EXTERIOR ENAMEL. COLOR SHALL BE AS SPECIFIED BY THE OWNER.
3. DOOR HARDWARE (EACH DOOR)
   - 3 EA BUTTS – STANLEY CB1961 4.5 x 4.5 x NRP
   - 1 PASSAGE LOCK SET – CORBIN RUSSWIN CL3610
   - 1 SET WEATHERSTRIP – PEMKO S88D
   - 1 DOOR SWEEP – PEMKO 18062CP
   - 1 THRESHOLD – PEMKO 253 x 3AFG
4. INSTALL SOLID BLOCKING FOR MOUNTING PANELS AND EQUIPMENT WHERE REQUIRED.
5. INTERIOR FINISH SHALL BE TEXTURED FIBER GLASS (FRP) 0.03" LAMINATED TO 5/8" FIRE RATED GYPSUM BOARD, AS MFG. BY NUDO PANELS, OR EQUAL.
6. STRUCTURAL GRADE LUMBER SHALL COMPLY WITH THE NATIONAL LUMBER MANUFACTURERS ASSOCIATION "NATIONAL SPECIFICATIONS FOR STRESS GRADE LUMBER". LUMBER SHALL BE HEM-FIR #2 OR BETTER, SINGLE MEMBER. ALL LUMBER EXPOSED TO WEATHER OR IN CONTACT WITH SOIL SHALL BE PRESSURE TREATED WITH AN APPROVED WOOD PRESERVATIVE.
7. PLYWOOD PANELS SHALL BE STAMPED WITH APA GRADE TRADEMARK OF THE AMERICAN PLYWOOD ASSOCIATION AND SHALL MEET U.S. PRODUCT STANDARDS P.S. 1-74. ALL PLYWOOD SHALL HAVE EXTERIOR GLUE.
8. ROOF SHEATHING SHALL BE APA CD EXPOSURE. INSTALL FACE GRAIN PERPENDICULAR TO SUPPORTS. STAGGER END PANEL JOINTS. NAIL AT 6" ON CENTER ALL SUPPORTED PANEL EDGES AT 12" ON CENTER AT INTERMEDIATE SUPPORTS UNLESS OTHERWISE NOTED. ALL NAILS SHALL BE 8d COMMON NAILS.

NOTES:
1. FIELD NOTES SHOULD BE RESEARCHED ALONG WITH THE PLAN INFORMATION, IN ANY FUTURE DIGGING, OR DESIGNING.
2. TEXT ONLY WAS CHANGED. DESIGN WAS NOT CHANGED. △

RECORD DRAWING CERTIFICATE
THESE DRAWINGS REFLECT RECORDED INFORMATION OBTAINED DURING CONSTRUCTION. INFORMATION PROVIDED HEREIN IS ACCURATE TO THE BEST OF MY KNOWLEDGE.
NAME Allyn E. Forkan DATE 4/16/08

STATE OF ALASKA ALLYN E. FORKAN No. CE 4342 REGISTERED PROFESSIONAL ENGINEER

VILLAGE SAFE WATER

STATE OF ALASKA MELINDA A. TSU No. 9808 REGISTERED PROFESSIONAL ENGINEER

MONTGOMERY WATSON Anchorage, Alaska
IN ASSOCIATION WITH EDC, INC. Engineers, Inc. Anchorage, Alaska

TOO'GHA INC. – TANANA, ALASKA
WATER DISTRIBUTION & WASTEWATER COLLECTION SYSTEM

LIFT STATION BUILDING DETAILS

REVISION	BY	DATE
AGENCY REVIEW	MT	7/14/00
ISSUED FOR CONSTRUCTION	MT	5/2001
△1 RECORD DRAWING	MT	4/2005
△2 RECORD DRAWING	AY	5/2008

Project No. 1189078.010102
Date JULY 14, 2000
Designed MT
Drawn LF
Approved GM

Sheet No. C-28
SHEET ___ OF ___

FILE: C:\Proj\tanana\wa_lines\cabit-2006\C28.DGN
JOB No.1189078.010102 TIME: 09-JUN-2006 10:47

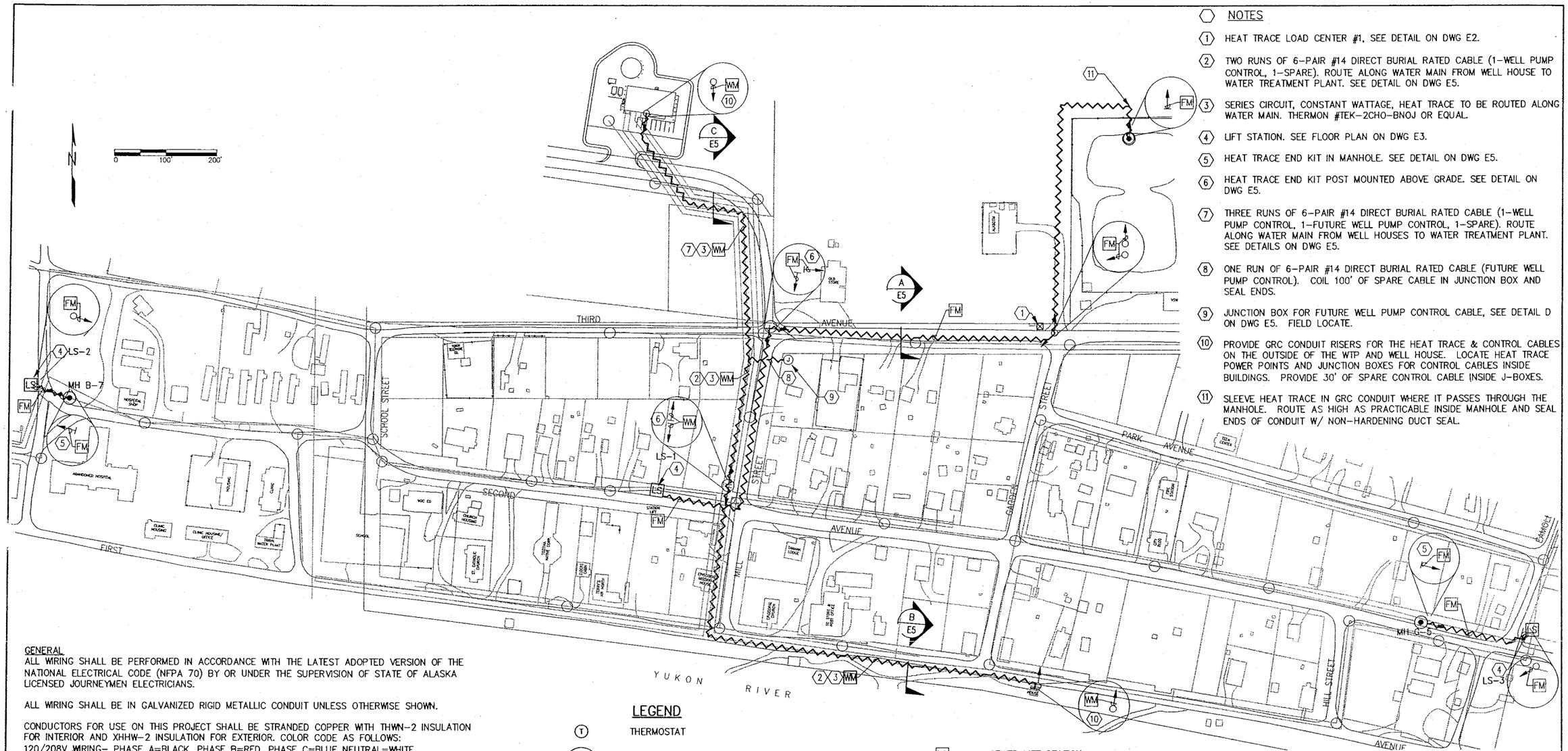

NOTES

1. HEAT TRACE LOAD CENTER #1, SEE DETAIL ON DWG E2.
2. TWO RUNS OF 6-PAIR #14 DIRECT BURIAL RATED CABLE (1-WELL PUMP CONTROL, 1-SPARE). ROUTE ALONG WATER MAIN FROM WELL HOUSE TO WATER TREATMENT PLANT. SEE DETAIL ON DWG E5.
3. SERIES CIRCUIT, CONSTANT WATTAGE, HEAT TRACE TO BE ROUTED ALONG WATER MAIN. THERMON #TEK-2CHO-BNOJ OR EQUAL.
4. LIFT STATION. SEE FLOOR PLAN ON DWG E3.
5. HEAT TRACE END KIT IN MANHOLE. SEE DETAIL ON DWG E5.
6. HEAT TRACE END KIT POST MOUNTED ABOVE GRADE. SEE DETAIL ON DWG E5.
7. THREE RUNS OF 6-PAIR #14 DIRECT BURIAL RATED CABLE (1-WELL PUMP CONTROL, 1-FUTURE WELL PUMP CONTROL, 1-SPARE). ROUTE ALONG WATER MAIN FROM WELL HOUSES TO WATER TREATMENT PLANT. SEE DETAILS ON DWG E5.
8. ONE RUN OF 6-PAIR #14 DIRECT BURIAL RATED CABLE (FUTURE WELL PUMP CONTROL). COIL 100' OF SPARE CABLE IN JUNCTION BOX AND SEAL ENDS.
9. JUNCTION BOX FOR FUTURE WELL PUMP CONTROL CABLE, SEE DETAIL D ON DWG E5. FIELD LOCATE.
10. PROVIDE GRC CONDUIT RISERS FOR THE HEAT TRACE & CONTROL CABLES ON THE OUTSIDE OF THE WTP AND WELL HOUSE. LOCATE HEAT TRACE POWER POINTS AND JUNCTION BOXES FOR CONTROL CABLES INSIDE BUILDINGS. PROVIDE 30' OF SPARE CONTROL CABLE INSIDE J-BOXES.
11. SLEEVE HEAT TRACE IN GRC CONDUIT WHERE IT PASSES THROUGH THE MANHOLE. ROUTE AS HIGH AS PRACTICABLE INSIDE MANHOLE AND SEAL ENDS OF CONDUIT W/ NON-HARDENING DUCT SEAL.

RECORD DRAWING CERTIFICATE
THESE DRAWINGS REFLECT RECORDED INFORMATION OBTAINED DURING CONSTRUCTION. INFORMATION PROVIDED HEREIN IS ACCURATE TO THE BEST OF MY KNOWLEDGE.
DATE: 5/2006 ENGINEER: EDC, Inc.

VILLAGE SAFE WATER

STATE OF ALASKA 49TH REGISTERED PROFESSIONAL ENGINEER John H. Freeman EE 8288

MONTGOMERY WATSON Anchorage, Alaska
IN ASSOCIATION WITH
EDC, INC. 213 W. Fireweed Ln. Anchorage, AK 99503

TOO'GHA INC.-TANANA, ALASKA
WATER DISTRIBUTION & WASTEWATER COLLECTION SYSTEM
HEAT TRACE PLAN

REVISION	BY	DATE
AGENCY REVIEW	JHF	7/2000
ISSUED FOR CONSTRUCTION	JHF	5/2001
1 RECORD DRAWING	JHF	5/2006

Project No. 11890728.010102
Date 5/07/2001
Designed JHF
Drawn KH
Approved

Sheet No. E1
SHEET ___ OF ___

GENERAL

ALL WIRING SHALL BE PERFORMED IN ACCORDANCE WITH THE LATEST ADOPTED VERSION OF THE NATIONAL ELECTRICAL CODE (NFPA 70) BY OR UNDER THE SUPERVISION OF STATE OF ALASKA LICENSED JOURNEYMEN ELECTRICIANS.

ALL WIRING SHALL BE IN GALVANIZED RIGID METALLIC CONDUIT UNLESS OTHERWISE SHOWN.

CONDUCTORS FOR USE ON THIS PROJECT SHALL BE STRANDED COPPER WITH THWN-2 INSULATION FOR INTERIOR AND XHHW-2 INSULATION FOR EXTERIOR. COLOR CODE AS FOLLOWS:
120/208V WIRING- PHASE A=BLACK, PHASE B=RED, PHASE C=BLUE NEUTRAL=WHITE, GROUND=GREEN OR BARE COPPER.

CONTROL WIRING- ANY COLOR OTHER THAN RED, BLACK, BLUE GREEN OR WHITE AS ALLOWED UNDER U/L AND NFPA 79.

FITTINGS - ALL NON-HUB CONDUIT TERMINATIONS SHALL BE BUSHED EITHER WITH NON-METALLIC BUSHINGS ON THREADED CONDUITS

ALL COMPONENTS FURNISHED FOR THIS PROJECT SHALL BE LISTED OR LABELED BY AN AGENCY ACCEPTABLE TO THE STATE OF ALASKA DEPARTMENT OF LABOR MECHANICAL INSPECTIONS DIVISION. U/L (UNDERWRITERS LABORATORIES) ETL (EDISON TEST LAB) FM (FACTORY MUTUAL) ARE ACCEPTABLE. NOTE THAT NRTL APPROVAL IS REQUIRED FOR CSA LABELS.

INSTALLATION OF HEAT TRACE SYSTEM SHALL BE PERFORMED IN ACCORDANCE WITH THE MANUFACTURERS REQUIREMENTS. PROVIDE COPIES OF ALL CUT SHEETS AND DOCUMENTATION RECEIVED DURING SHIPPING TO OWNERS REPRESENTATIVE UPON COMPLETION.

COORDINATE INSTALLATION WITH OTHER TRADES PRIOR TO ROUGH-IN. MAINTAIN CLEARSPACE AT ALL COMPONENTS THAT MAY REQUIRE ADJUSTING OR TROUBLE SHOOTING WHILE ENERGIZED.

TESTING

TEST ALL CONDUCTORS PRIOR TO TERMINATION WITH A 500VDC MEGOHMETER. REPLACE ALL CONDUCTORS EXHIBITING LESS THAN 10 MEGOHM IMPEDANCE. REPEAT TEST.

MATERIALS

GENERAL COMPONENTS SHALL BE AS CALLED OUT ON THE PLANS AND LEGEND. PROVIDE AS SPECIFIED AND SHOWN. MANUFACTURER AND PART NUMBER DESIGNATIONS INDICATE THE MINIMUM PERFORMANCE AND QUALITY REQUIRED ON THIS PROJECT.

LEGEND

- T — THERMOSTAT
- X/Y — MOLDED CASE CIRCUIT BREAKER, X = AMPERE RATING, Y = NO. OF POLES
- MOTOR OVERLOAD
- FUSE
- BUS
- EXPOSED CONDUIT, RGSC UNLESS OTHERWISE SHOWN
- CONDUIT RUN UNDERGROUND OR IN CONCRETE
- X-Y,Z — HOMERUN TO PANEL "X", CIRCUITS NO. Y AND Z SLASHES IMPLY CONDUCTOR COUNT: I.E. 2-HOT, 1-NEUTRAL CONDUIT RUNS NOT SLASHED OR OTHERWISE DEFINED ARE 3/4" C WITH 3#12.
- GROUND
- CONDUIT RUN - CHANGE IN ELEVATION
- LIQUID-TIGHT FLEXIBLE CONDUIT
- M — KILOWATT-HOUR METER
- UH — UNIT HEATER, HORIZONTAL
- LS — SEWER LIFT STATION
- FM WM — SEWER FORCE MAIN OR WATER MAIN
- MAN HOLE
- PP — HEAT TRACE POWER POINT
- EP — HEAT TRACE END KIT. SEE DETAIL ON DWG E2.
- HEAT TRACE, SELF-REGULATING. THERMON MODEL # RSX 8-2 BCFOJ OR EQUAL, UNLESS OTHERWISE NOTED.
- HP — MOTOR, 3 PHASE
- HP — MOTOR, SINGLE PHASE
- J — JUNCTION BOX OR FITTING
- SEAL-OFF FITTING
- CONTROL OR LIGHTING PANELBOARD
- $ — SINGLE POLE SWITCH.
- 120V DUPLEX RECEPTACLE, NEMA CONFIGURATION 5 - 20R.
- GFI — 120V DUPLEX GROUND FAULT INTERRUPT RECEPTACLE, NEMA CONFIGURATION 5 - 20R.

ABBREVIATIONS

AFF	ABOVE FINISH FLOOR
BCU	BARE COPPER
C	CONDUIT
CP	CONTROL PANEL
DWG	DRAWING
(E)	EXISTING
G	GROUND CONDUCTOR
GFI	GROUND FAULT INTERRUPTING
GRC	GALVANIZED RIGID (STEEL) CONDUIT
H	HOT CONDUCTOR
HOA	HAND OFF AUTO
HL	HIGH LEVEL
HP	HORSEPOWER
KVA	KILO-VOLT-AMPERES
LTF	LIQUID TIGHT FLEXIBLE CONDUIT (METALLIC)
N	NEUTRAL CONDUCTOR
TEMP	TEMPORARY
TWSH	TWISTED WIRE SHIELDED CONDUCTOR
TYP	TYPICAL
V	VOLTS
XFMR	TRANSFORMER

NOTES

1. 100 WATT, 120V, THERMOSTATICALLY CONTROLLED PANEL HEATER, WATLOW #040050C1-B-040H-03T OR EQUAL.
2. COMBINATION METER/MAIN LOAD CENTER 100A, 120/240V. 1ø, 3-WIRE, NEMA 3R SQUARE D# SC1624M100C OR EQUAL.

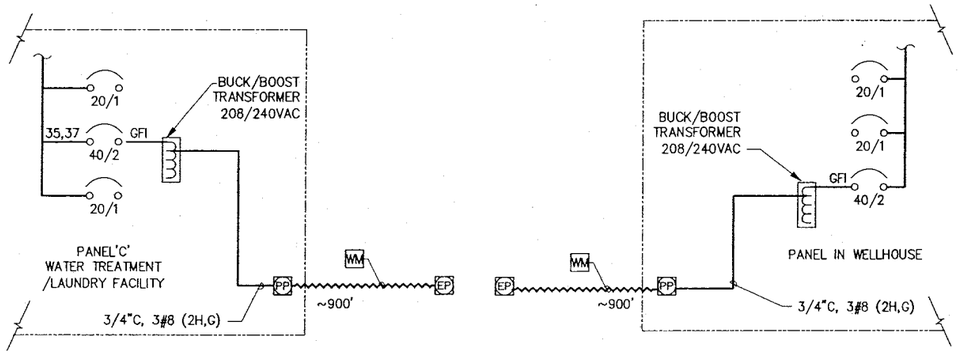

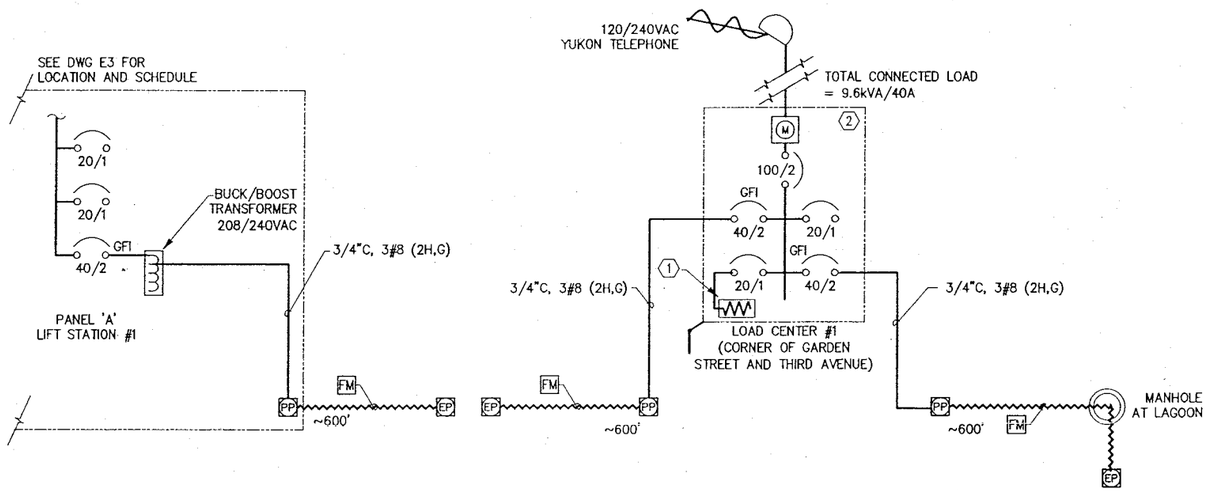

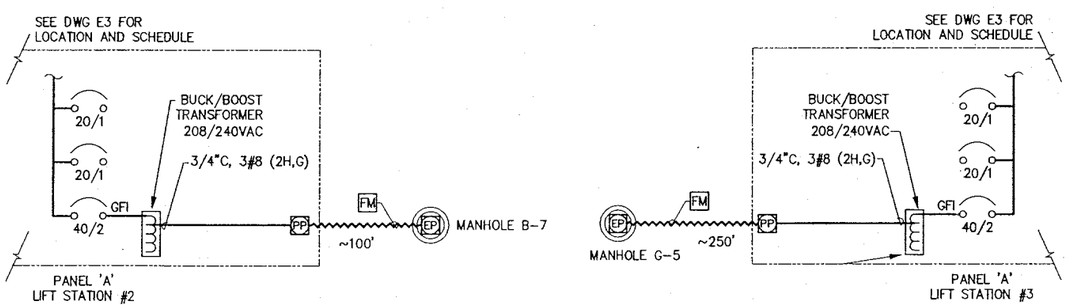

HEAT TRACE POWER ONE-LINES

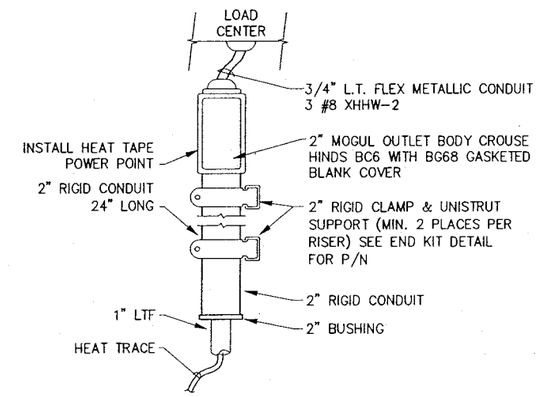

1 POWER POINT DETAIL

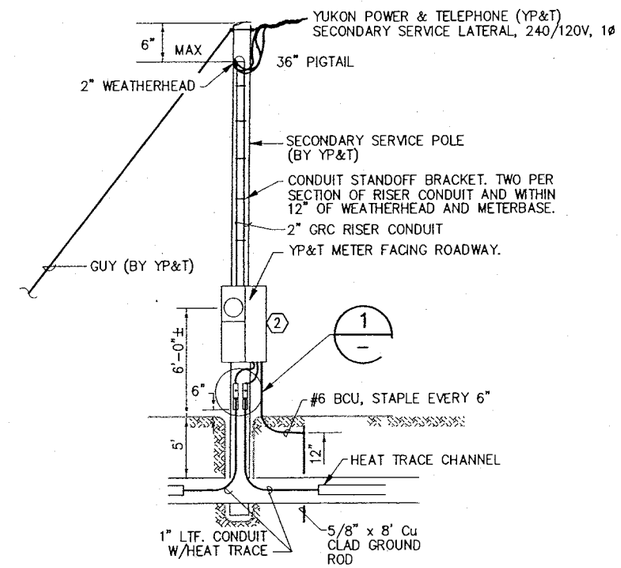

SERVICE RISER DETAIL

RECORD DRAWING CERTIFICATE
THESE DRAWINGS REFLECT RECORDED INFORMATION OBTAINED DURING CONSTRUCTION. INFORMATION PROVIDED HEREIN IS ACCURATE TO THE BEST OF MY KNOWLEDGE.
DATE: 5/2006 ENGINEER EDC, Inc.

VILLAGE SAFE WATER

STATE OF ALASKA
John H. Fowler
EXPIRES 4/30/01
REGISTERED PROFESSIONAL ENGINEER

MONTGOMERY WATSON
Anchorage, Alaska
IN ASSOCIATION WITH
EDC, INC.
213 W. Fireweed Ln.
Anchorage, AK 99503

TOO'GHA INC.-TANANA, ALASKA
WATER DISTRIBUTION & WASTEWATER COLLECTION SYSTEM
HEAT TRACE ONE-LINE & DETAILS

REVISION	BY	DATE
AGENCY REVIEW	JHF	7/2000
ISSUED FOR CONSTRUCTION	JHF	5/2001
1 RECORD DRAWING	JHF	5/2006

Project No. 1189078.010102
Date 5/07/2001
Designed JHF
Drawn KH
Approved

Sheet No. E2
SHEET ____ OF ____

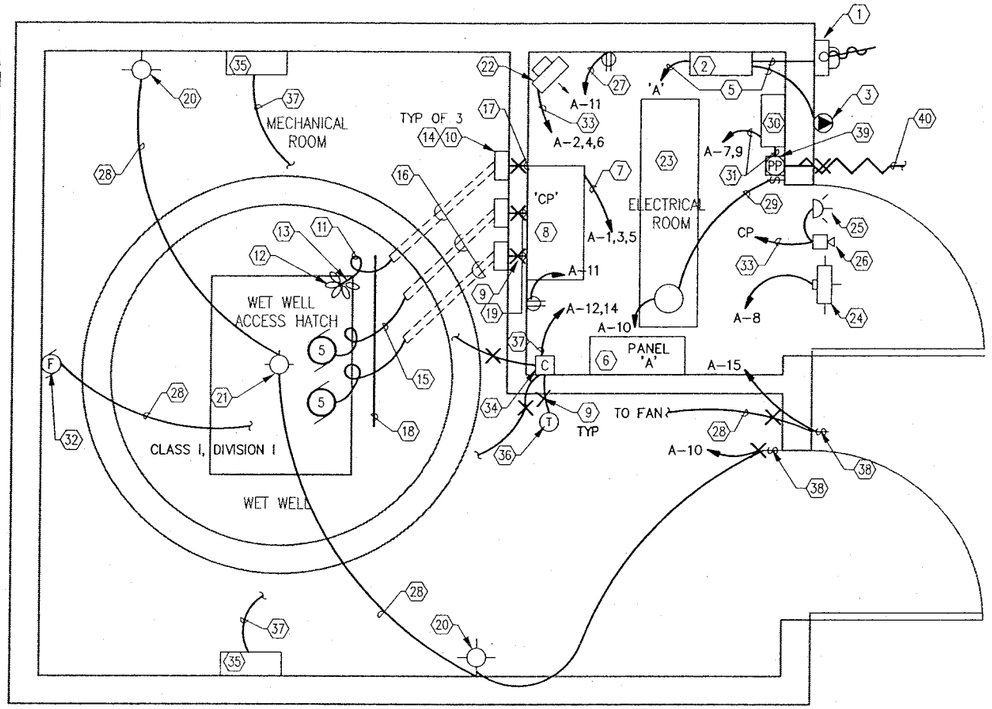

NOTE: HORSEPOWER SHOWN IS FOR LIFT STATION #1. LIFT STATIONS #2 AND #3 = 2.2HP

FLOOR PLAN

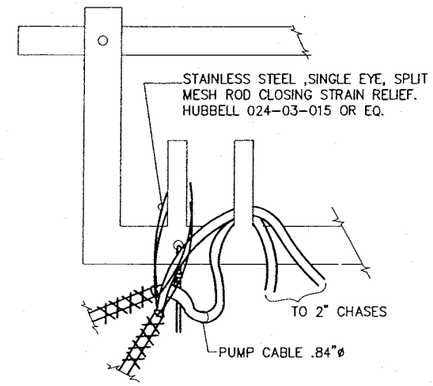

1 MOTOR CABLE SUPPORT DETAIL

NO SCALE

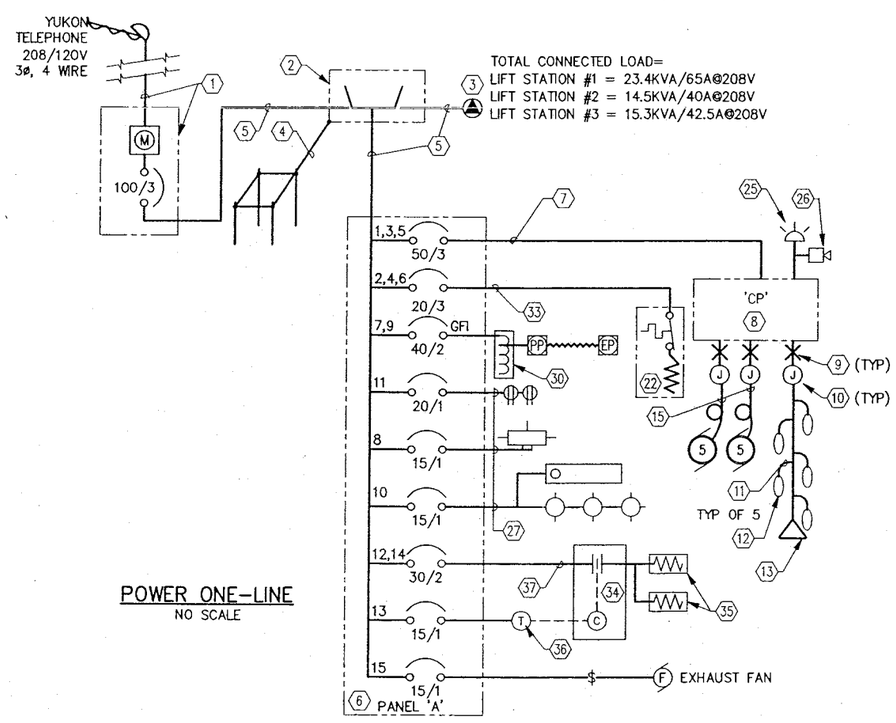

POWER ONE-LINE

NO SCALE

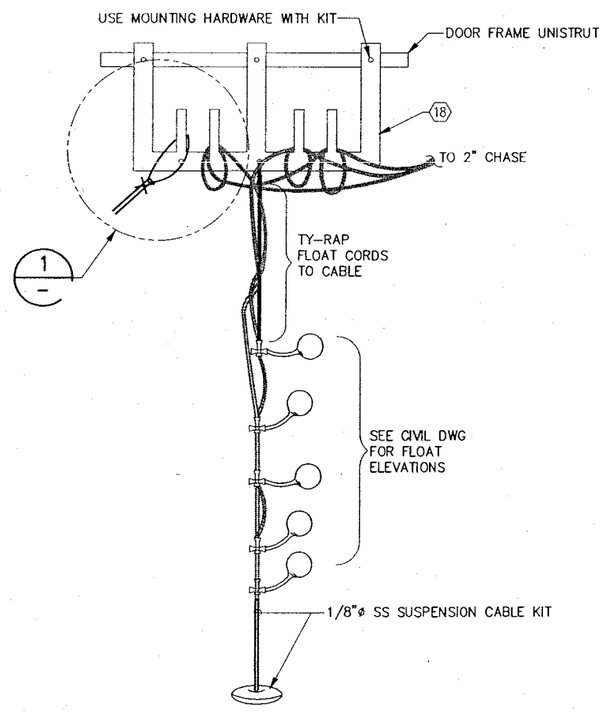

2 FLOAT SUPPORT DETAIL

NO SCALE

NOTES

1. 3ø, 4 WIRE, 208/120V, 100A METER MAIN COMBO, LOCKABLE WITH 2" GRC RISER/WEATHERHEAD AND 4#2 XHHW. COORDINATE SERVICE & METERBASE REQUIREMENTS W/YP&T.
2. NEMA 1 ENCLOSED, 100 AMP, 240 VOLT, 2P2T MANUAL TRANSFER SWITCH W/ S/N. SQUARE D #B2253. BOND NEUTRALS AT THIS POINT.
3. 100A, 600V, MOTOR INLET WITH MATCHING CONNECTOR BODY CROUSE HINDS NPQ1038/NPR10366, AND AJC57 BACK BOX.
4. #6 BCU BONDED TO 4EA. 5/8" x 8' CU CLAD GROUND RODS (LOCATED AROUND BLDG. PERIMETER, CONNECTED BY #2 BCU & BURIED NOT LESS THAN 2-1/2 FEET) & TO MAIN DISCONNECT & EQUIPMENT ENCLOSURES.
5. 2"C, 4#2 (3H,N), 1#6 (G)
6. 208V, THREE PHASE, 4 WIRE, 100A, MLO, 30 SPACE, NEMA 12 PANELBOARD. SQUARE D # NQOD430L100CU.
7. 5#8 (3H,N,G) IN 1" EMT.
8. CONTROL PANEL. SEE SHEET E4 FOR SCHEMATIC.
9. SEAL-OFF FITTING CROUSE-HINDS TYPE EYS. SEAL AROUND CONDUIT TO MAINTAIN VAPOR TIGHT BARRIER BETWEEN HAZARDOUS & NON-HAZARDOUS LOCATIONS.
10. EXPLOSION PROOF JUNCTION BOX. FOR TRANSITIONING FROM SOW CORD TO INDIVIDUAL CONDUCTORS. KILLARK EXB OR EQUAL. WALL MOUNT J-BOX AT 48" AFF.
11. 18/2 TYPE SO-W FLOAT SWITCH CORD.
12. LIQUID LEVEL FLOATS, INSTALL FLOATS ON SINGLE WEIGHTED CABLE (ITEM 13) AT ELEVATIONS PROVIDED BY FIELD ENGINEER. FLOATS EQUAL TO CONSOLIDATED LS-A4.
13. WEIGHTED 1/8"SS CABLE SUPPORT FOR FLOAT MOUNTING. SECURE TO HATCH FRAME. EQUAL TO CONSOLIDATED #CBM. SEE DETAIL 2.
14. EXPLOSION PROOF CORD GRIP FOR CONNECTIONS AT J-BOX (NOTE #10). KILLARK ZE SERIES.
15. 3/C#8 W/GND, 2#14 TYPE SO-W EXTRA HARD USAGE CORD.
16. 2" GRC CHASE IN SLAB. PROVIDE GROUNDING BUSHING AT EITHER END. EXTEND TO 6" BEHIND HATCH OPENING IN WETWELL & UP WALL TO BELOW J-BOX (NOTE #10). SLOPE TO DRAIN TOWARD WET WELL.
17. 3/4"C, 10#14 (FLOAT SIGNALS). LABEL CONDUIT "INTRINSICALLY SAFE"
18. PROVIDE CABLE/CORD HANGER, FLYGT # 14589405 OR EQUAL. SEE DETAIL 1 & 2.
19. 3/4"C, 3#10 & 2#14.
20. 100W INCANDESCENT, EXPLOSION PROOF LIGHT. WALL MOUNT, @ 8'AFF. CROUSE-HINDS BX240.
21. 100W INCANDESCENT, EXPLOSION PROOF LIGHT, CEILING MOUNT W/GUARD CROUSE-HINDS # EVCX240.
22. ELECTRIC UNIT HEATER, 208V, 3ø, 1.5KW W/ INTEGRAL THERMOSTAT, KING ELECTRICAL MFG # KPB2406.
23. 2 LAMP, 4', WRAP-AROUND FLUORESCENT FIXTURE SURFACE MOUNT. LITHONIA LB 332 120.
24. 70W HPS WALLPACK WITH BLACK DIE CAST ALUMINUM HOUSING, PRISMATIC GLASS REFRACTOR. GASKETED AND EQUIPPED COLD WEATHER BALLAST, AND PHOTOELECTRIC CONTROL. LITHONIA TWH70S120PE. LOCATE A 3' MINIMUM ABOVE DOOR.
25. ALARM STROBE BEACON, 120VAC, WEATHERPROOF, SURFACE MOUNT ABOVE DOOR. FEDERAL MODEL FB2PST OR APPROVED EQUAL.
26. ALARM HORN, 120VAC, WEATHERPROOF, SURFACE MOUNT ABOVE DOOR. FEDERAL MODEL 350-WB OR EQ.
27. 1/2"C, 3#12 (H,N,G)
28. 1/2"C, 3#12 (SWITCHLEG,N,G).
29. 1/2"C, 3#12 (H,SWITCHLEG,G)
30. 208:240V BUCK BOOST TRANSFORMER
31. 3/4"C, 3#8 (2H,G)
32. EXPLOSION PROOF EXHAUST FAN, 120V, 1ø, PENN MODEL #BX12Q, 1/6HP TO SWITCH ON W/ LIGHT
33. 3/4"C, 4#12.
34. CONTACTOR, 4-POLE, 30A, 208V, NEMA 12 RATED WITH 120V COIL SQUARE D # LA40V02 OR EQUAL.
35. 208V, 3KW, SINGLE-PHASE, EXPLOSION-PROOF HEATER, WALL MOUNT, CHROMOLOX #FTEP-3 OR EQUAL.
36. THERMOSTAT, EXPLOSION-PROOF SPST 120V, CHROMALOX #WR-80EP OR EQUAL.
37. 1/2 "C, 3#10 (2H,G).
38. SNAP SWITCH, 120V, 20A, SINGLE POLE, BRYANT #4901 IN EXPLOSION-PROOF ENCLOSURE, CROUSE-HINDS #EFS 1129 OR EQUAL.
39. HEAT TRACE POWER POINT IN CAST WEATHERPROOF JUNCTION BOX.
40. HEAT TRACE ROUTED IN CONDUIT BELOW GRADE TO FORCE MAIN.

RECORD DRAWING CERTIFICATE
THESE DRAWINGS REFLECT RECORDED INFORMATION OBTAINED DURING CONSTRUCTION. INFORMATION PROVIDED HEREIN IS ACCURATE TO THE BEST OF MY KNOWLEDGE.
DATE: 5/2/06 ENGINEER: EDC Inc.

VILLAGE SAFE WATER

STATE OF ALASKA 7491 PROFESSIONAL ENGINEER John H. Fleischer CE 8288 REGISTERED PROFESSIONAL ENGINEER

MONTGOMERY WATSON
Anchorage, Alaska
IN ASSOCIATION WITH
EDC, INC.
213 W. Fireweed In.
Anchorage, AK 99503

TOO'GHA INC.-TANANA, ALASKA
WATER DISTRIBUTION & WASTEWATER COLLECTION SYSTEM

LIFT STATION EQUIPMENT PLAN

REVISION	BY	DATE
AGENCY REVIEW	JHF	7/2000
ISSUED FOR CONSTRUCTION	JHF	5/2001
1 RECORD DRAWING	JHF	5/2006

Project No. 1189078.010102
Date 5/07/2001
Designed JHF
Drawn KH
Approved

Sheet No. E3
SHEET OF

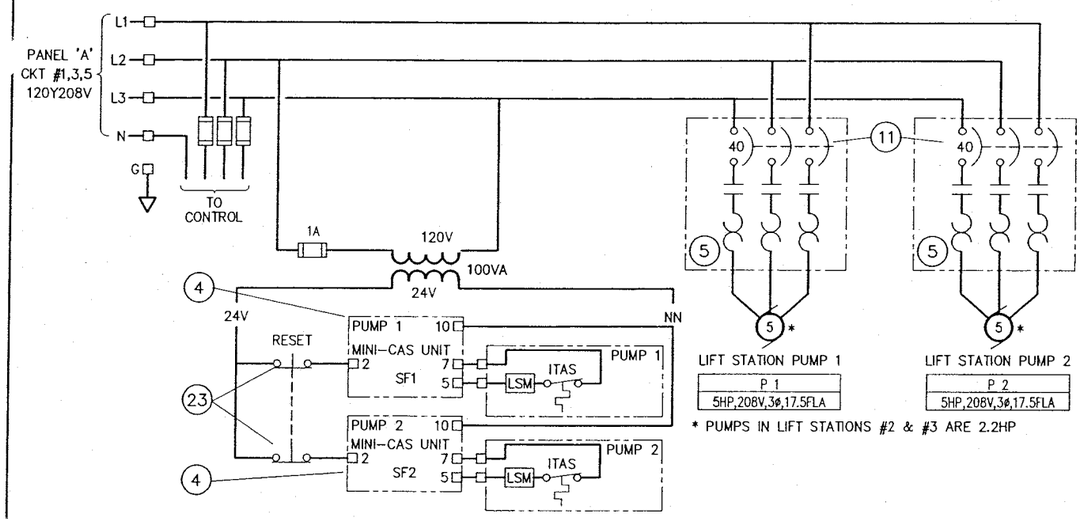

	COMPONENT SCHEDULE
1	INTRINSICALLY SAFE RELAY 2-CHAN. WARWICK OR EQUAL
2	RELAY, 120V, 3PDT, 11-PIN OCTAL SOCKET MOUNT W/ INDICATING FLAG ALLEN BRADLEY #700-HA33A1
3	PILOT LIGHT, PUSH TO TEST, 120V, LENS TINT AS SHOWN SQUARE D TYPE K 9001 KT (R=R31, G=G31, A=A31, B=B31)
4	FLYGT MINI-CAS PUMP MONITOR RELAY
5	3-POLE MOTORSTARTER, NEMA SIZE 1, 120V COIL SQUARE D 8536 TYPE SC03V08
6	RELAY, 120V, TIME DELAY ON, 2PDT, 8-PIN OCTAL SOCKET MOUNT ALLEN BRADLEY #700 HT 12AA1
7	PILOT LIGHT, 120V, LENS TINT AS SHOWN. SQUARE D TYPE K 9001 KP (R=R31, G=G31, A=A31, B=B31)
8	2-PUMP ALTERNATOR, 120V COIL TIME MARK MODEL 261D 120
9	ELAPSED TIME METER, 0-99999.9 HR, 120VAC VEEDER-ROOT #87F1089 TYPE 779536-201
10	3-POSITION SELECTOR SWITCH SQUARE D TYPE SK 9001 SKS42BH2
11	CIRCUIT BREAKER, UNIT MOUNTED W/ THRU THE DOOR OPERATOR SQUARE D 650 TYPE MAG (RATING AND POLES AS SHOWN) SQUARE D 9421 TYPE L OPERATOR
12-17	NOT USED
18	STATIONARY STROBE FEDERAL ELECTRA FLASH 141 WITH RED LEXAN DOME
19	N.O. PUSHBUTTON SQUARE D, TYPE SK 9001 - CONTACT BLOCKS AS REQUIRED
20	CYCLE COUNTER, PANEL MOUNT, RESETABLE, 120V VEEDER-ROOT #81F2992 TYPE 743895-211
21	ALARM HORN, 120V, WEATHER PROOF, FEDERAL 350WB 120
22	VOLTAGE MONITOR, 3-PHASE, 240V, ADJUSTABLE, 2 SEC DELAY TIME MARK 258B
23	N.C. PUSHBUTTON SQUARE D, TYPE SK 9001 - CONTACT BLOCKS AS REQUIRED

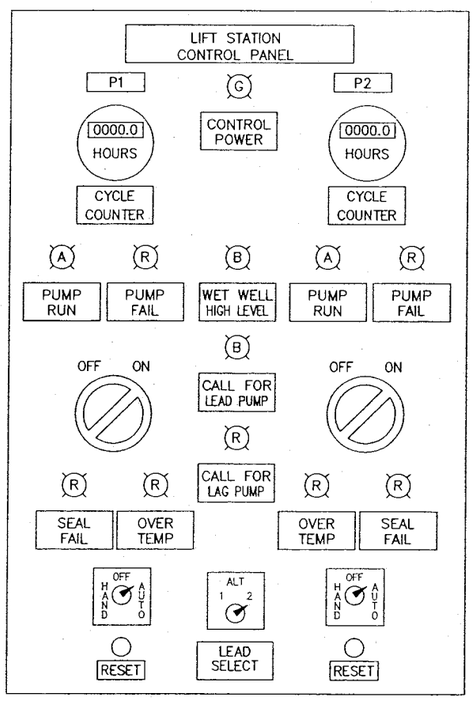

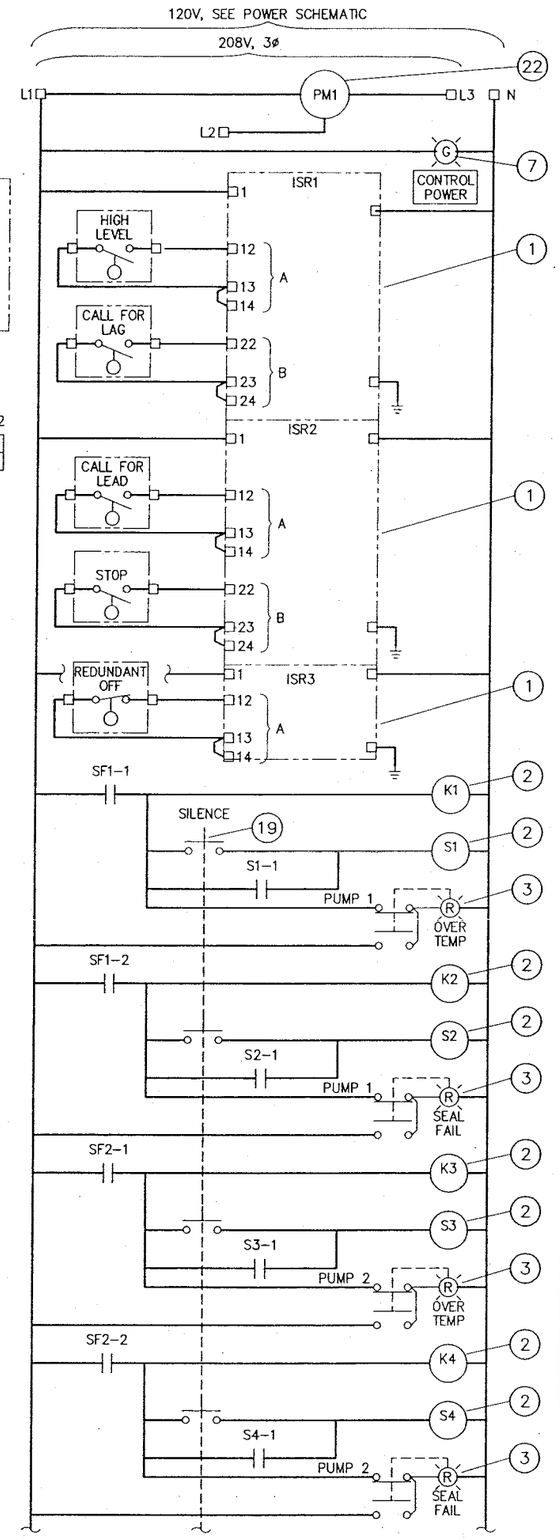

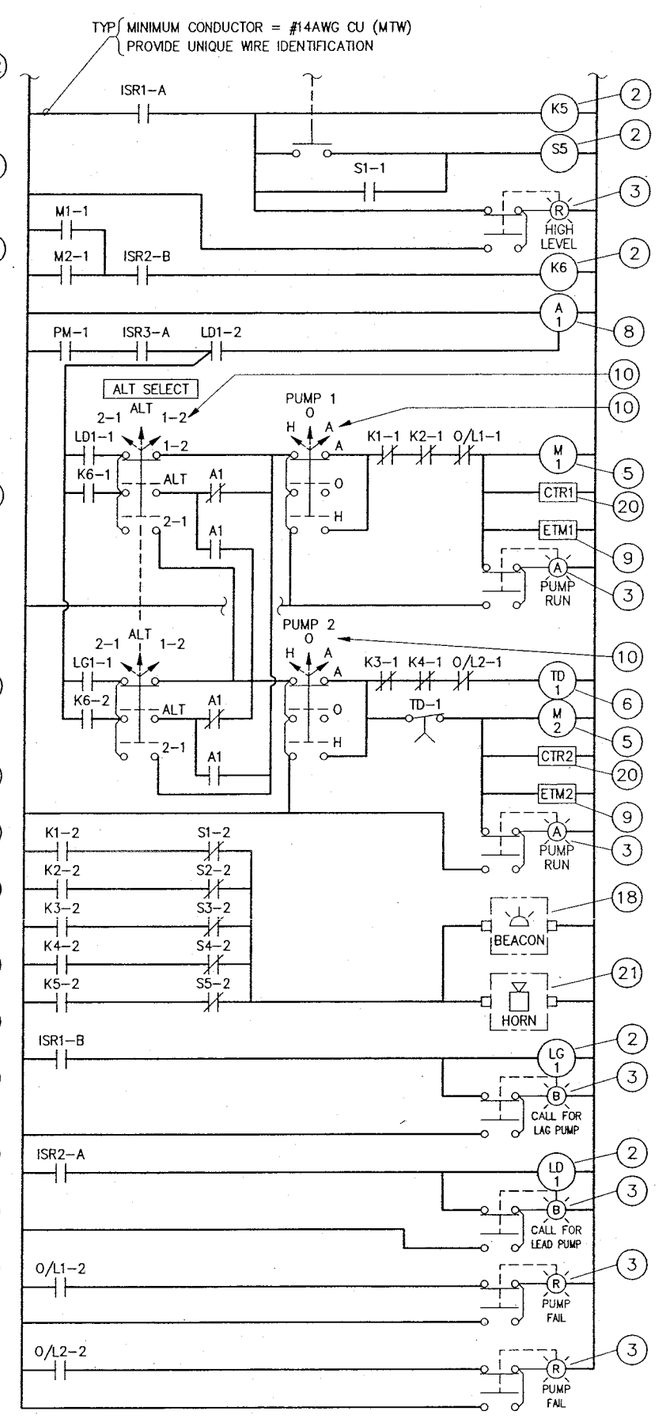

RECORD DRAWING CERTIFICATE
THESE DRAWINGS REFLECT RECORDED INFORMATION OBTAINED DURING CONSTRUCTION. INFORMATION PROVIDED HEREIN IS ACCURATE TO THE BEST OF MY KNOWLEDGE.
DATE: 5/2006 ENGINEER: EDC INC.

VILLAGE SAFE WATER

STATE OF ALASKA 749 TEL John K. Fredson CE 8266 REGISTERED PROFESSIONAL ENGINEER

MONTGOMERY WATSON
Anchorage, Alaska
IN ASSOCIATION WITH
EDC, INC.
213 W. Fireweed Ln.
Anchorage, AK 99503

TOO'GHA INC.-TANANA, ALASKA
WATER DISTRIBUTION & WASTEWATER COLLECTION SYSTEM
CONTROL PANEL LAYOUT & SCHEMATIC

REVISION	BY	DATE
AGENCY REVIEW	JHF	7/2000
ISSUED FOR CONSTRUCTION	JHF	5/2001
1 RECORD DRAWING	JHF	5/2006

Project No. 1189078.010102
Date 5/07/2001
Designed JHF
Drawn KH
Approved

Sheet No. E4
SHEET ___ OF ___

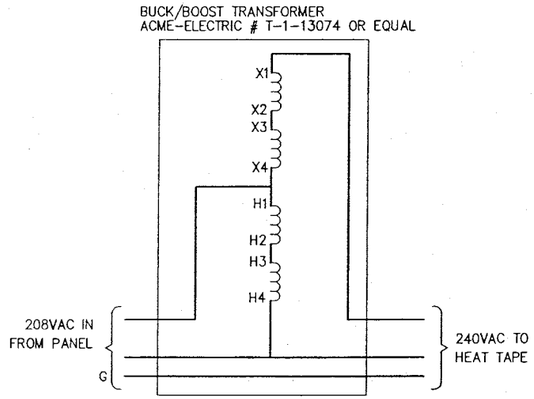

BUCK/BOOST TRANSFORMER SCHEMATIC

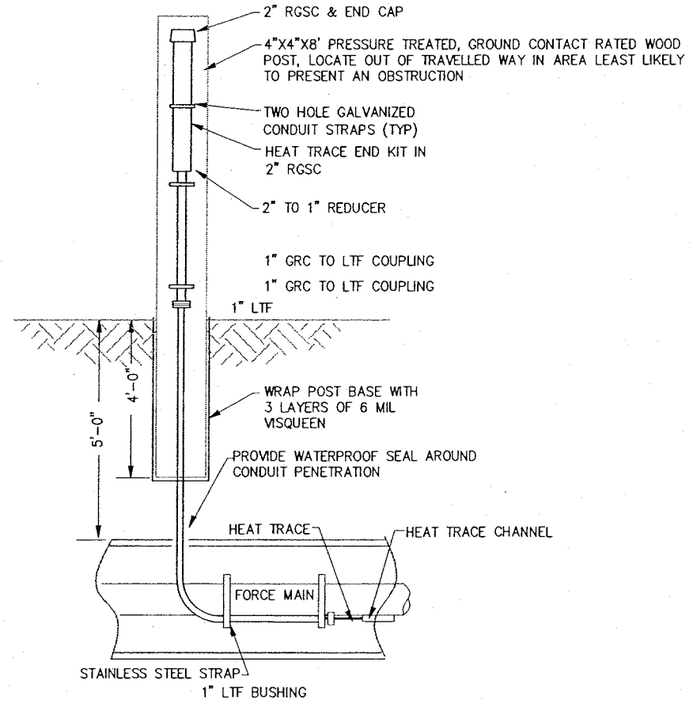

TYPICAL END KIT DETAIL
NO SCALE

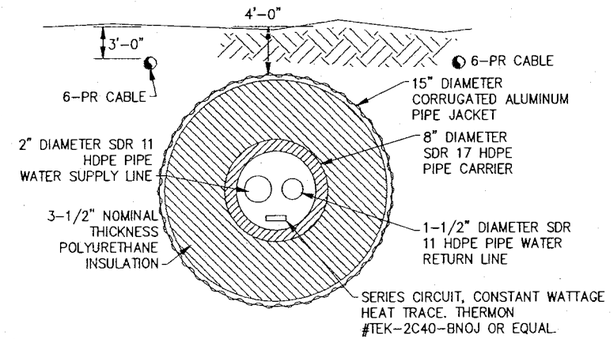

B/E1 WATER TRANSMISSION MAIN SECTION
NO SCALE

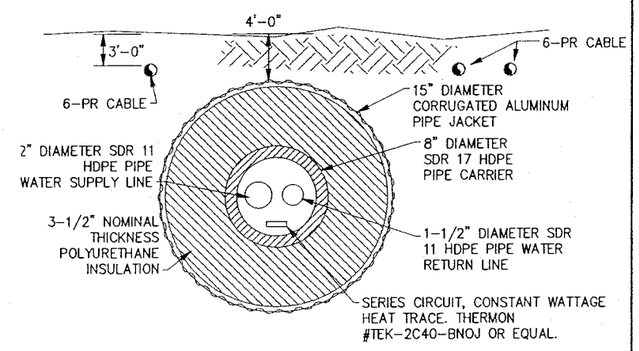

C/E1 WATER TRANSMISSION MAIN SECTION
NO SCALE

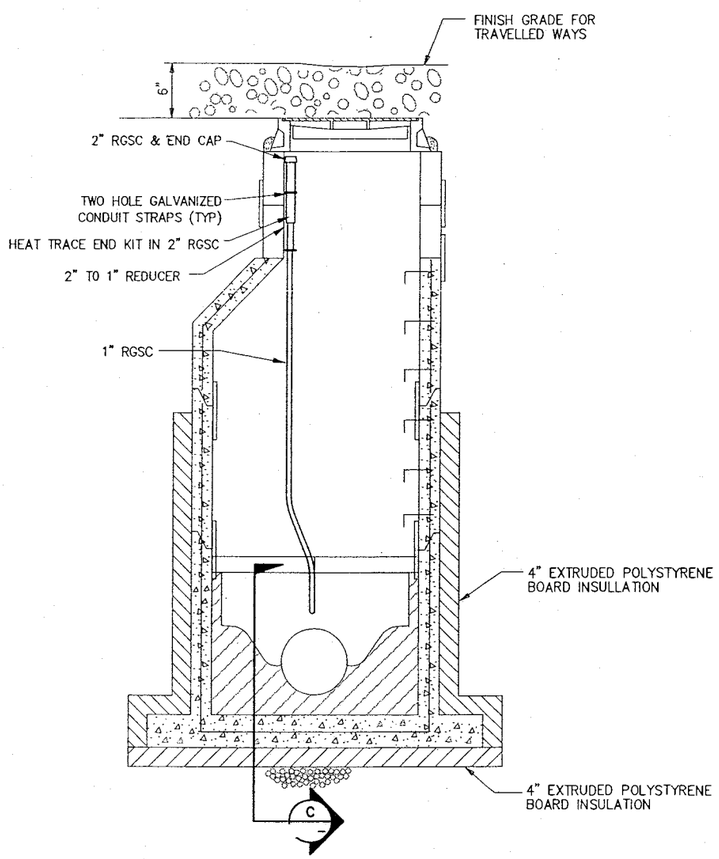

MANHOLE DETAIL
NO SCALE

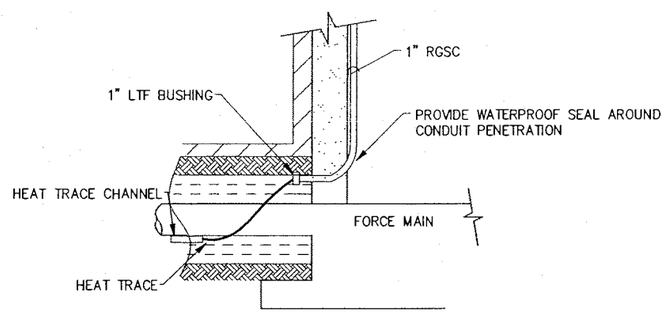

C/– PENETRATION DETAIL
NO SCALE

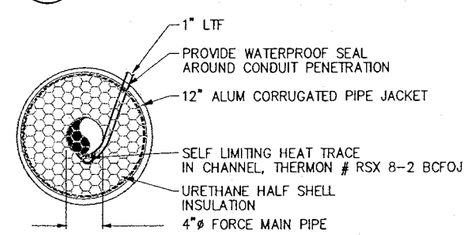

A/E1 FORCE MAIN SECTION
NO SCALE

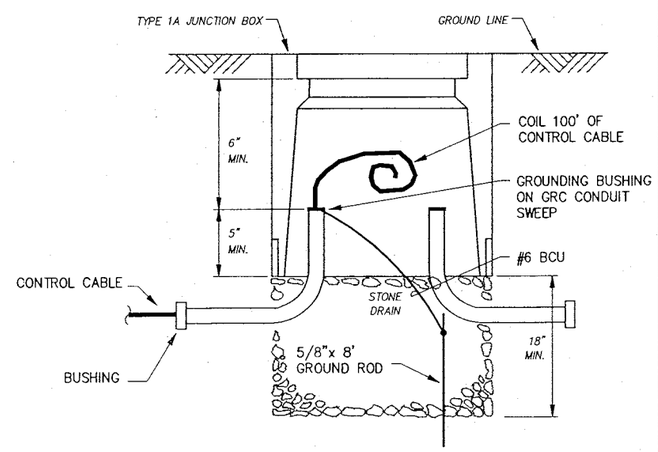

D/– JUNCTION BOX DETAIL
NO SCALE

RECORD DRAWING CERTIFICATE
THESE DRAWINGS REFLECT RECORDED INFORMATION OBTAINED DURING CONSTRUCTION. INFORMATION PROVIDED HEREIN IS ACCURATE TO THE BEST OF MY KNOWLEDGE.
DATE: 5/2006 ENGINEER: EDC, Inc.

VILLAGE SAFE WATER

STATE OF ALASKA
John H. Fleshman
EE 5248
REGISTERED PROFESSIONAL ENGINEER

MONTGOMERY WATSON
Anchorage, Alaska
IN ASSOCIATION WITH
EDC, INC.
213 W. Firewood Ln.
Anchorage, AK 99503

TOO'GHA INC.-TANANA, ALASKA
WATER DISTRIBUTION & WASTEWATER COLLECTION SYSTEM
ELECTRICAL DETAILS

REVISION	BY	DATE
AGENCY REVIEW	JHF	7/2000
ISSUED FOR CONSTRUCTION	JHF	5/2001
1 RECORD DRAWING	JHF	5/2006

Project No. 1189078.010102
Date 5/07/2001
Designed JHF
Drawn KH
Approved

Sheet No. E5
SHEET ___ OF ___

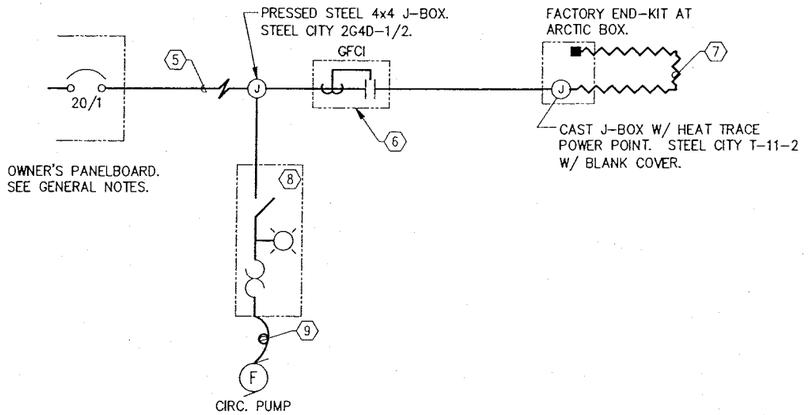

1 HOUSE SERVICE DETAIL
NO SCALE

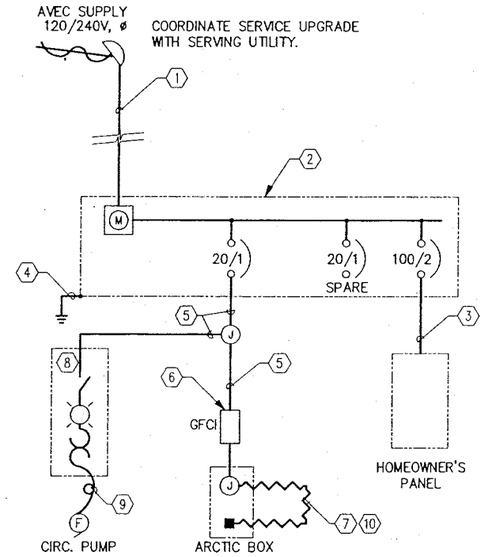

2 TYPICAL ONE-LINE DIAGRAM
NO SCALE

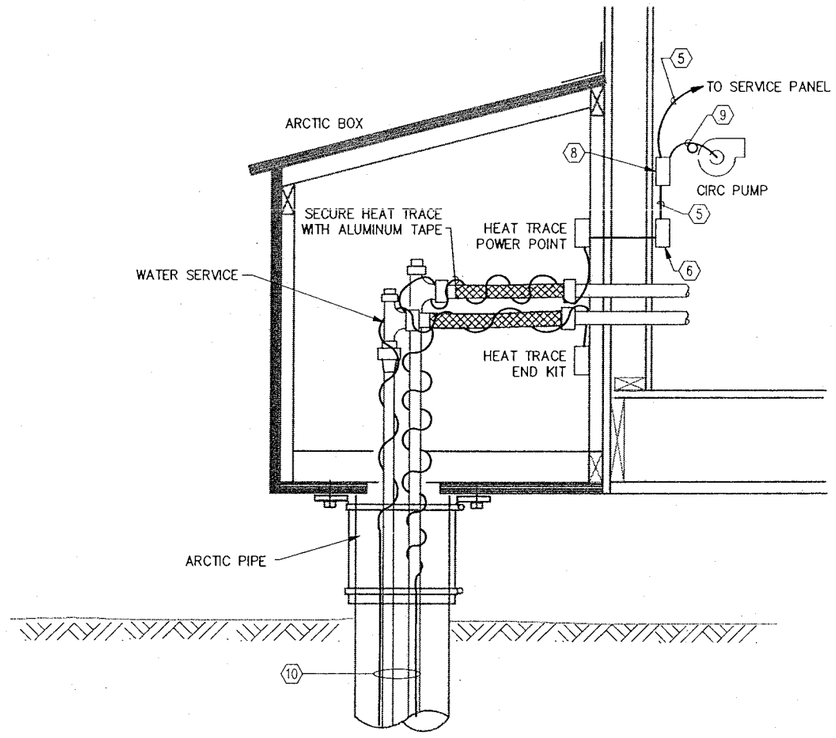

3 HOUSE WATER SERVICE HEAT TRACE DETAIL
NO SCALE

NOTES:

1. 2" GRC RISER, SLIPFITTER, OFFSET AND HUB. 3#2 XHHW.
2. DISCONNECT/REMOVE EXISTING SERVICE. PROVIDE NEW 100A, 120/240V, 1ø COMBINATION SERVICE ENTRANCE DEVICE. SQUARE D # SC1624M100C.
3. 1-1/2"C, 3#2 (2H,N) & 1#6 (G)
4. VERIFY EXISTING GROUND. MINIMUM #6 BCU TO 5/8"x 8' CU CLAD ROD.
5. 1/2" EMT, 3#12 XHHW-2 (H,N,G) OR 12/2 W/G NM IF CONCEALED IN DRY LOCATIONS (TYP).
6. ARCTIC TRACE C33120SP GFCI MODULE W/ INDICATOR LIGHT
7. HEAT TRACE, 3W/FT, ARCTIC TRACE Z120312CBTL W/ COPPER BRAID.
8. MANUAL MOTOR STARTER, FRACTIONAL HORSEPOWER, 120V, NEMA 1, W/PILOT LIGHT. SQUARE D #CLASS 2510 # KG1A.
9. 1/2" LTF, 3#12 (N,G,SWITCHLEG)
10. ROUTE HEAT TRACE ALONG HOUSE SERVICE LINE TO WATER MAIN CONNECTION AND BACK TO HOUSE SERVICE.

GENERAL NOTES

THE PREFERRED METHOD FOR POWERING THE HOUSE SERVICE HEAT TRACE AND WATER CIRCULATION PUMP IS FROM THE HOME OWNER'S EXISTING PANELBOARD. THIS IS PROVIDED THAT THE EXISTING PANELBOARD IS: IN GOOD CONDITION, INSTALLED ACCORDING TO CODE AND HAS A SPARE 20A SINGLE POLE CIRCUIT AVAILABLE. IF THIS IS NOT THE CASE, THE HOME OWNER'S SERVICE SHALL BE UPGRADED PER THE ONE-LINE DIAGRAM ON THIS SHEET.

RECORD DRAWING CERTIFICATE
THESE DRAWINGS REFLECT RECORDED INFORMATION OBTAINED DURING CONSTRUCTION. INFORMATION PROVIDED HEREIN IS ACCURATE TO THE BEST OF MY KNOWLEDGE.
DATE: 5/2006 ENGINEER: EDC Inc.

VILLAGE SAFE WATER

STATE OF ALASKA 49TH REGISTERED PROFESSIONAL ENGINEER John H. Fanshaw EE 9288

MONTGOMERY WATSON
Anchorage, Alaska
IN ASSOCIATION WITH
EDC, INC.
213 W. Firewood Ln.
Anchorage, AK 99503

TOO'GHA INC.-TANANA, ALASKA
WATER DISTRIBUTION &
WASTEWATER COLLECTION SYSTEM
ELECTRICAL
HOUSE SERVICE DETAILS

REVISION	BY	DATE
AGENCY REVIEW	JHF	7/2000
ISSUED FOR CONSTRUCTION	JHF	5/2001
1 RECORD DRAWING	JHF	5/2006

Project No. 1189078.010102
Date 5/07/2001
Designed JHF
Drawn KH
Approved

Sheet No. E6
SHEET ___ OF ___